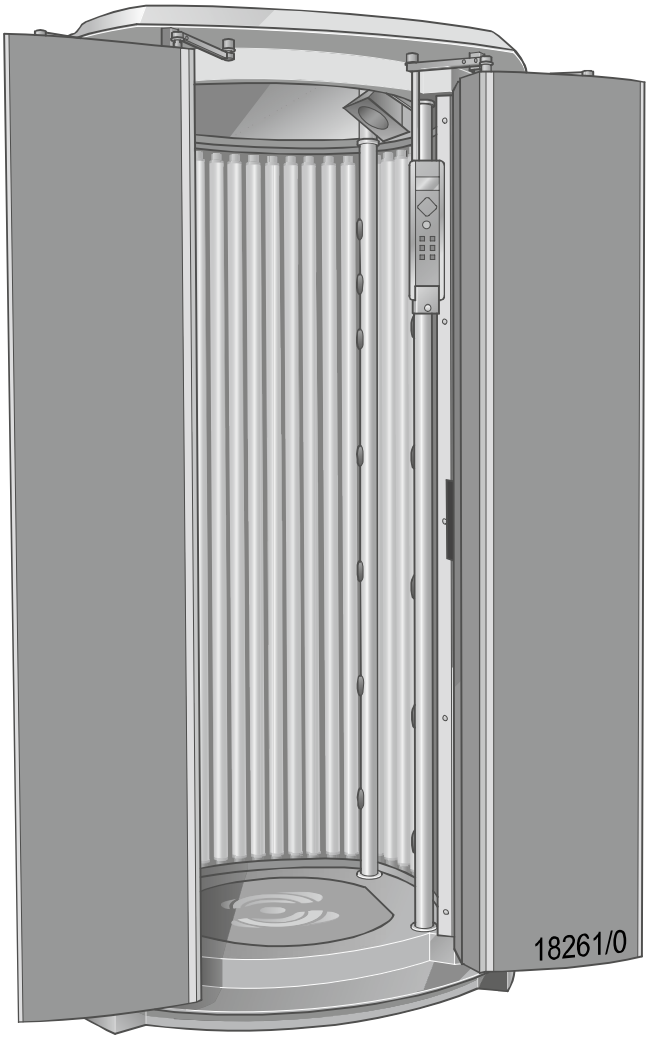

Operating instructions

RedWave Recovery Pro

Model-No.: JK 194 / RV 32-10 VBR

1034279-00 / us-en / 10.2025

WARNING!

This device is designed for use with NON-UV emitting lamps only!

Use of UV lamps, or any lamps other than those specified for use in this device, may cause serious injury and is considered a violation of FDA regulations including:

Code of Federal Regulations Title 21 CFR1040.20 TITLE 21–FOOD AND DRUGS CHAPTER I–FOOD AND DRUG ADMINISTRATION DEPARTMENT OF HEALTH AND HUMAN SERVICES SUBCHAPTER J–RADIOLOGICAL HEALTH PART 1040.20 PERFORMANCE STANDARDS FOR LIGHT-EMITTING PRODUCTS.

Violation of this code may subject the violator(s) to litigation, fines, and possible imprisonment, etc.

Furthermore, adulterating this device in any way (including relabeling or using UV lamps etc.) will void the ETL listing of the device. Such action will cause the device to be considered out of compliance with federal, state, and local regulations.

If you have any questions regarding lamp replacement procedures, proper use, etc please contact the importer directly at 1-800-643-0086.

Because all physical activity can be strenuous and subject users to risk, all users are urged to consult with physician prior to usage if there are any concerns or questions associated with the use of this device.

Business / device operator should provide a live explanation of the system to all users prior to actual use. Please read all warnings and cautionary information contained within prior to using device.[1]

---

[1] *Statements regarding expected performance, etc have not been evaluated by the FDA (Food & Drug Administration). This product is not intended to treat, cure, prevent, or diagnose any disease or illness. The information provided is not a substitute for advice from a licensed physician or other healthcare professional. Actual results will vary according to skin type, usage, genetic influences, diet, exercise, lifestyle, etc. There is no guarantee of results.

Contact information

Customer Service

JK Products & Services
1823 Grant Avenue
Suite A
Jonesboro, Arkansas 72401
800-445-0624
870-935-9046
http://jkproducts.us/service

Manufacturer

JK-Products GmbH
Rottbitzer Str. 69
53604 Bad Honnef
GERMANY
Tel.: +49 (0) 22 24 / 818-0

WARNING!

WARNING!

Read these operating instructions.

Failure to observe these instructions:

- may result in serious injury and death,
- can result in damage to the device and the environment.

– For the safety of yourself and others, read and observe all instructions contained herein before operating the device.

– Please make the instructions and additional information available to anyone who operates or services the device.

– Should you sell this unit or give it to another party, please make sure that you provide them with these operating instructions.

Copyright

The copyright remains with JK-Holding GmbH.

The contents may not be duplicated (in whole or part), distributed or utilized for competition purposes without authorization or disclosed to other parties.

The right to make technical changes in regard to the figures and information contained in this instruction manual is reserved!

1 Table of Contents

2 What certain words and signs mean (Glossary) 8

2.1 Definitions 8
2.2 Warning signs 9
2.3 Symbols on the device 11

3 What this device is 13

3.1 Guidelines 13
3.2 Export 13
3.3 Scope of delivery 13
3.3.1 Options 13
3.4 Device description 14
3.5 Options 15
3.6 Function description 15
3.7 Transport 16
3.8 Installation location 16
3.8.1 Ventilation 16
3.8.2 Setup location 17
3.8.3 Commissioning 19
3.9 Signs and stickers on the device 20
3.10 Technical data 24
3.10.1 Power rating, electrical specifications and noise level 24
3.10.2 Dimensions 25
3.10.3 Lamp configuration 26
3.10.4 Accent lighting 26
3.10.5 Spare parts 27

4 Why you use it 28

4.1 Intended use 28
4.2 Skin condition 28

5 Who cannot use it 29

5.1 Prohibited usage 29
5.1.1 RedWave Recovery Pro System 29
5.1.2 Vibra Shape (vibration plate) 29

6 What you must do to avoid serious harm 30

6.1 General 30
6.2 RedWave Recovery Pro System 31
6.3 Sensor 31

7 What you must do to avoid other harm 32
7.1 General 32
7.2 RedWave Recovery Pro System 32
7.3 Sensor 32
7.4 Vibra Shape - vibration plate - (additional feature) 33
7.5 Foreseeable misuse 33
7.6 Obligations of the studio operator 33
7.7 Staff training 34

8 Risks of using this device 35

9 Benefits of using this device 36

10 How to decide to use this device 37

11 What to do before the application 38

12 How to use this device 39
12.1 How to set this device up 39
12.2 How to make sure the device works 39
12.3 How to use it to treat your condition 39
12.4 How to choose correct application regimen 40
12.4.1 Application times 40
12.5 How to operate the device 41
12.5.1 Control Center 41
12.5.2 User settings overview 41
12.6 Functions 42
12.6.1 Navigation 43
12.6.2 Description 44
12.7 Operating display of the sensor 46
12.8 Selection of the application 46
12.9 Sun Select setting with the outer interface 46
12.10 Measurement (automatic mode) 46
12.11 Connections 47
12.11.1 Couple with Bluetooth® devices 47
12.11.2 Smartphone 49
12.12 How to use 51
12.12.1 How to start 51
12.12.2 Application tips 52
12.12.3 How to stop 52
12.13 What to do after the application 53
12.13.1 Cleaning and disinfection 53
12.14 Safety instructions for cleaning/ disinfection and maintenance 54
12.15 How to clean/disinfect 56
12.15.1 Cleaning and disinfection of surfaces 57
12.15.2 Cleaning/disinfection plan 58

12.16 How to maintain 59
12.16.1 Technical modifications 59
12.16.2 Maintenance plan 59
12.16.3 Cleaning and maintenance work preparation 61
12.16.4 Instructions for replacing the lamps 62
12.16.5 Cleaning and disinfection of the sensor 64
12.16.6 Cleaning or replacing lamps in the doors 65
12.16.7 Cleaning or replacing lamps on the side walls 70
12.16.8 Cleaning or replacing lamps and filter panels in the canopy 73
12.16.9 Cleaning or replacing the lamps and filter panels in the shoulder tanner 73
12.16.10 Cleaning or replacing Ambient Light 73
12.16.11 Cleaning or replacing the canopy accent lighting 73
12.16.12 Cleaning or replacing the front panel accent lighting 73
12.16.13 Cleaning the filters 74
12.16.14 Cleaning the filter mats 75
12.16.15 Cleaning the filter mats in shoulder tanner 76
12.16.16 Air conditioning: Empty the condensation tank and clean the filter 76
12.16.17 AQUA / AROMA SYSTEM maintenance 76
12.17 How to store the device 77
12.17.1 Decommissioning 77
12.17.2 Storage 77
12.17.3 Disposal 77

13 What to do when things go wrong 78
13.1 Troubleshooting 79

14 Where you can find out more 80

15 How we studied this device 81

16 Appendix 82
16.1 Model No. JK 194 / RV 32-10 VBR or JK 194 / RV 32-10: EMC information 82
16.1.1 Table 201: Guidelines and manufacturer's declaration – Electromagnetic emissions 82
16.1.2 Table 202: Guidelines and manufacturer's declaration – Electromagnetic interference 83
16.1.3 Table 204: Guidelines and manufacturer's declaration – Electromagnetic interference 84
16.1.4 Table 206: Recommended safe distances between portable and mobile HF communications equipment and Model No. JK 194 / RV 32-10 VBR or JK 194 / RV 32-10 85

17 JK-Products, Inc. – Limited Warranty 86
17.1 Limited Acrylic Warranty 87
17.2 Warranty Claims 88
17.2.1 Policy & Procedures.....88
17.2.2 Labor Warranty Claim/ Credit Procedures.....89
17.2.3 Quality inspection and acceptance form 89
17.3 Limited Lifetime Warranty.....90

18 Index..... 91

2 What certain words and signs mean (Glossary)

2.1 Definitions

Studio operator

People who provide devices to users on a commercial basis. The studio operator is trained to operate and maintain the device and is responsible for the orderly operation of the device as well as compliance with the maintenance intervals.

User

A person who uses the device at a commercial location.

Staff

People who are responsible for the operation, cleaning/disinfection as well as general maintenance work and who instruct the users in the operation of the devices.

JK Factory Certified Technician

Level 1
Authorized to perform general maintenance such as replacing lamps, aqua mist, and fragrance containers as well as overall cleaning of the unit.

Level 2
Authorized to perform maintenance and repairs such as replacement of ballast, framed acrylic, electronic circuit boards, and other electrical components.

Level 3
Authorized and trained to utilize JK Products proprietary diagnostic software to adjust operating parameters and perform detailed diagnostics.

Level 4
This individual is uniquely qualified to assess the condition of a unit and make a determination if the device meets the requirements for continued use ten (10) years from the date of manufacture.

NOTE:

Each technician level is authorized to perform the tasks of technician levels smaller in number to theirs. E.g. a level 3 technician is authorized to perform the tasks assigned to a level 1 and 2 technician.

2.2 Warning signs

Danger notices, nonobservance will lead to death or serious injury:

DANGER!

Type and source of danger, e.g. 'DANGER – High voltage!'

Description of the consequences, e.g. 'You can be killed or injured by an electric shock!'

Countermeasures:

– Disconnect device from power supply before opening.
– Do not reach into the inside with the device switched on.

Warning notices, nonobservance can lead to death or serious injury.

WARNING!

Type and source of danger, e.g. 'WARNING – hot surface!'

Description of the consequences, e.g. 'You can burn your hand (skin, face)!'

Countermeasures:

– Do not touch hot parts and nearby surfaces.
– Wait until hot parts and surfaces have cooled down.

CAUTION!

Unauthorized lamps!

The word 'Caution' together with the warning sign points out that less than serious injury can be expected here.

Countermeasures:

– Avoid doing this.

CAUTION!

USE ONLY the specified NON-UV lamps! The conformity declaration and the ETL Intertek test mark only apply for the specified lamps. The mark is voided if other lamps are used. Use of UV lamps in this device is a violation of 21 CFR 1040.20, FDA.

NOTICE

ESD-sensitive components!

The word 'NOTICE' without warning sign points out that danger for devices, materials and the environment can be expected here.

Countermeasures:

– Avoid doing this.

Important information:

NOTE:

This symbol does not identify safety notices, but states information for a better understanding of the processes.

2.3 Symbols on the device

The following symbols are displayed on the device or on the packaging:

Manufacturer, company address

Read the operating instructions!

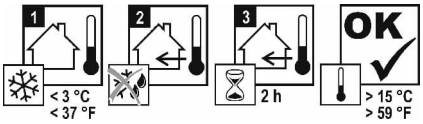

Where there are great differences in temperature between the transport route and the installation site the device may not be put into operation immediately after being set up.

Wait at least 2 hours before connecting the device to the power supply.

Maximum transport weight

Do not stack!

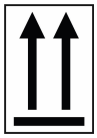

This side up.

Keep dry.

Temperature limitations.

The temperature limits are noted next to the upper and lower horizontal line.

Recyclable material.

06 PS	Polystyrene
20 PAP	Cardboard
21 PAP	Mixed paper
40 FE	Steel
50 FOR	Wood
	Permitted air pressure during transport and storage.

3 What this device is

3.1 Guidelines

This product is in conformity with UL STD 482 and fulfils the requirements for the exempt group according to IEC 62471.

3.2 Export

This device is exclusively intended for use in the USA and may not be exported to other countries and operated there! The manufacturer assumes no liability whatsoever in the event of non-compliance. High liability risks may occur for the exporter and/or the studio operator in the event of noncompliance.

3.3 Scope of delivery

- RedWave Recovery Pro device
- RED LIGHT TECHNOLOGY lamps
- Protective goggles
- Allen-key
- Sound system
- AUX cable
- Technical documentation (folder with instructions, brochures for error codes and Professional Setup Manager and additional documentation)

3.3.1 Options

- Bluetooth®
- Vibra Shape (additional feature)

Device equipment varies depending on the model.

In this description, all standards and optional components/functions are taken into account which must be observed during operation and / or when performing maintenance.

The control panel also differs according to the varying equipment: Only those buttons are visible that can be operated, i.e. the corresponding function must be included in the device`s equipment.

3.4 Device description

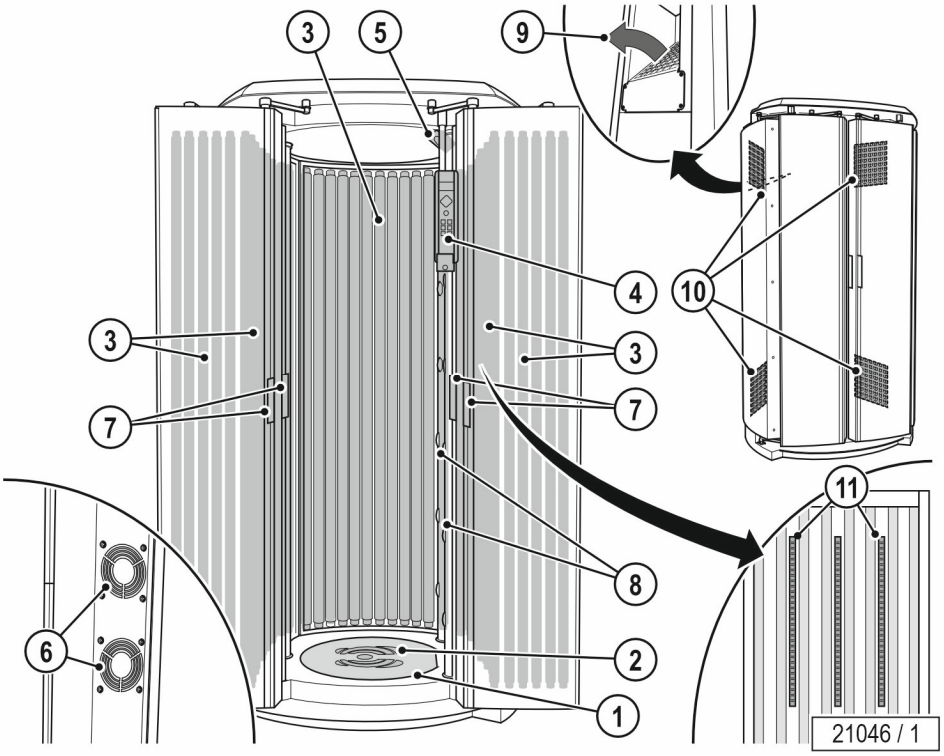

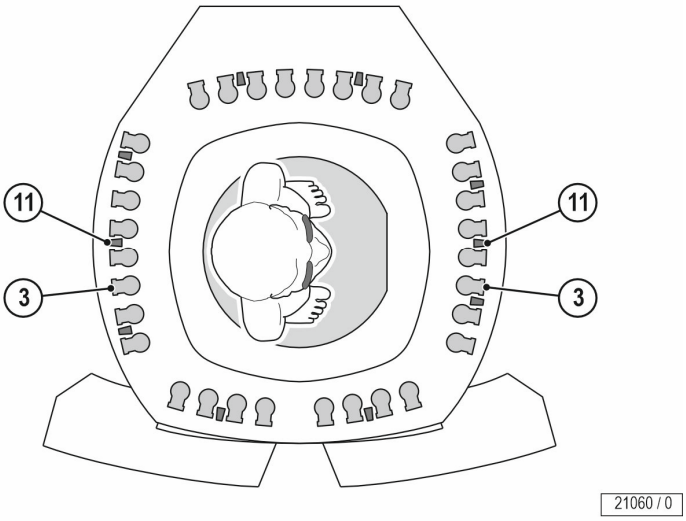

1. Entry area
2. Foot mat (silicone) and vibration plate (additional feature)
3. Low-pressure lamps
4. Operating panel
5. Loudspeaker
6. Fans (door cooling)
7. Door handles (outside / inside)
8. Body cooling air nozzles
9. Not applicable for this device.
10. Supply air filter
11. Red Light & Near Infrared LED

3.5 Options

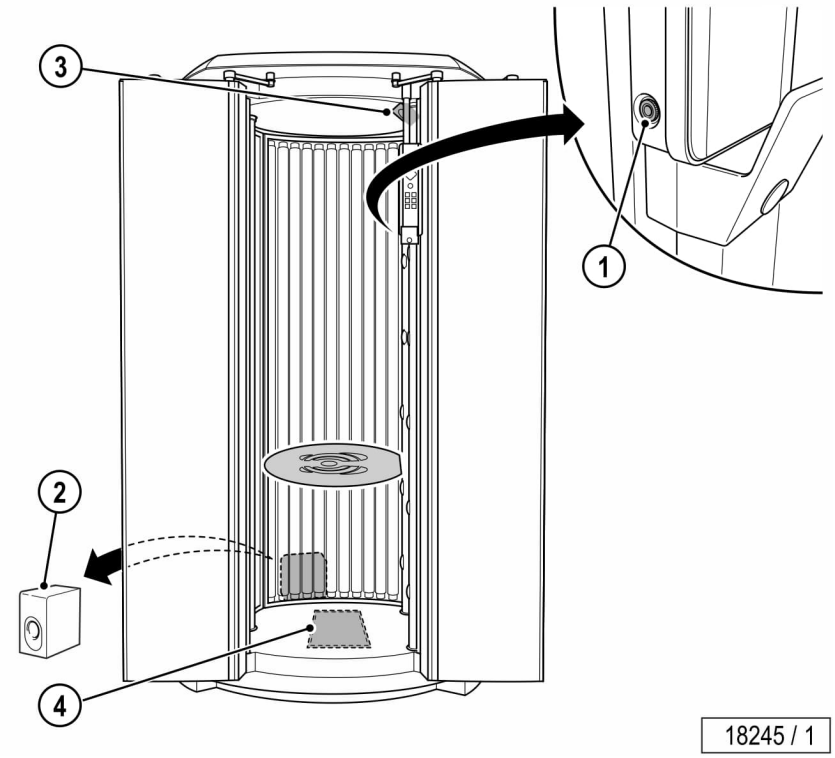

1. AUX-connection
2. Subwoofer
3. Loudspeaker
4. Vibration plate (additional feature)

3.6 Function description

See page 41, ‘How to operate the device‘ for information on control and operation of the device and its features.

Vibra Shape

The additional feature Vibra Shape can be used additionally.

Information about the Vibra Shape feature can be found in the separate document ‘OI Vibra Shape #1031045-..’ which is provided in the Technical Documentation folder.

3.7 Transport

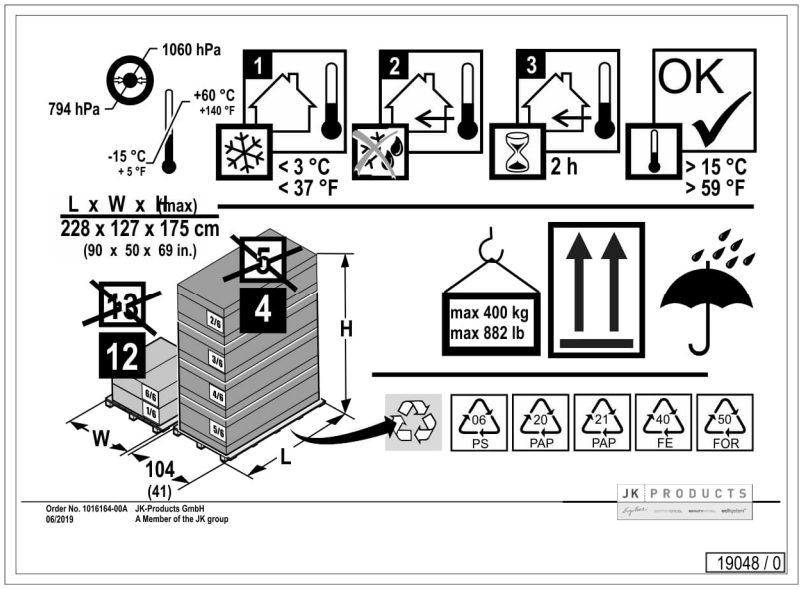

3.8 Installation location

This product is suitable for fitness studios or similar installation locations.

You may find detailed information on installation and setting up in the Installation Instructions (see folder Technical Documentation).

3.8.1 Ventilation

NOTICE

Danger of failure!

Danger of overheating by obstruction of the air routing.

– Observe the ventilation information to avoid serious system malfunctions.

3.8.2 Setup location

WARNING!

WARNING!

Sudden movements and malfunctions!

Crushing hazard.

– The device is not suitable for operation in mobile facilities (ships, buses, trains).

Risk of falling! Risk of being injured by falling objects!

Ceilings and joists may break if the load per square foot is too high!

– Ensure that ceiling and joists are sufficient for the weight of your device (see Installation Instructions in the folder Technical Documentation).

CAUTION!

Danger of overheating by obstruction of the air routing!

Any liability is excluded in case of damage or injury proven to be the result of the use of non-genuine spare parts.

Use of non-compliant lamps voids warranty and risks injury!

– Do not change, obstruct or block the air inflow and outflow area to the device or make any unauthorized changes to the device. The manufacturer shall bear no liability for damage or injuries resulting from such actions.
– Observe the ventilation information to avoid serious system malfunctions.
– Before putting a device into operation, the transport pallet must be removed from under the device. Danger of overheating by obstruction of the air routing.
– Maintain the minimum distances from the walls! Dimensions are given on page 25.
– Only use OEM spare parts of the same type! The use of other parts will void the manufacturer's warranty!

NOTICE

Salty air! Contaminated air!

Device damage due to corrosion of the housing and electrical components.

– Do not install the device near swimming pools.
– Do not operate the device in locations with aggressive environmental conditions (e.g. air containing chlorine).

Damage to the device possible!

Where there are great differences in temperature between the transport route and the installation site the device may not be put into operation immediately after being set up.

– Wait at least 2 hours before connecting the device to the power supply.

Damage to the device possible!

The device is not to be used outdoors.

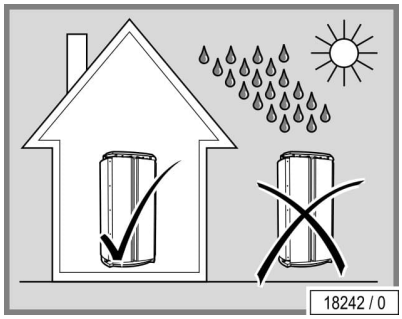

Possible damage to the unit!

The unit is not to be used outdoors.

Keep the unit away from open flames or sources of ignition.

Environmental conditions

- Optimum ambient temperature:
  between 59 °F (15 °C) and ~90°F (32°C)
- Storage temperature: between 5 °F (-15 °C) and 140 °F (+60 °C)
- Air pressure: between 794 hPa and 1060 hPa
- Relative humidity: between 30 % and 70 %

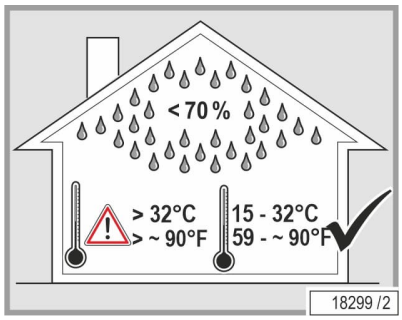

You can obtain data regarding the air supply and ventilation from the customer service department (see page 2).

Please contact the customer service department before putting the device into operation - see page 2.

Strong Radio Frequency (RF) emitters!

Please do not install or operate the device in close proximity to strong Radio Frequency (RF) emitters such as metal detectors or electromagnetic anti-theft systems. Please inform the installation personal of any existing RF emitting systems prior to installation.

NOTE:

Sources of RF emissions are not always obvious, therefore special care should be taken to ensure all sources have been properly identified before installation of the device.

3.8.3 Commissioning

DANGER!

DANGER!

Damaged mains power cable!

Danger to persons through electric shock or burns.

– Only the manufacturer or specialist companies are permitted to replace the mains power cable.

Initial commissioning will be undertaken by the manufacturer's own service personnel or by a (Level 3) JK Factory Certified Technician. The device will be handed over ready for use.

As the studio operator you are responsible for abiding by the electrical regulations applicable at the installation site.

The unit incorporates special preventive measures with regard to the electromagnetic compatibility and must be installed and commissioned according to the EMC instructions obtained chapter 16 Appendix.

If the device has not been operated or serviced for a period of one year or longer, it must first be inspected by a (Level 3) JK Factory Certified Technician before being put back into operation. Failure to do so may result in personal injury or property damage.

If faults occur due to the operation of the devices, then the operator is responsible for the installation of an audio frequency blocking device in the building electrical installation. Please contact your electrician. The electrician is familiar with the technical connection conditions of your local utility company so that the audio-frequency blocking device can be matched to the power system of your power supply company.

The unit can be operated temporarily or continuously with a stand-alone or non-mains-synchronous power supply (e.g. microgrid or back-up system). However, you must contact the customer service department before putting the unit into operation in this way – see page 2.

NOTE:

In case of a fire suspicion, immediately interrupt the power supply, if it is safely possible.

Please respect the statutory, official and workmen's compensation insurance regulations which remain unaffected by the foregoing.

3.9 Signs and stickers on the device

Signs which warn of danger areas or give important information on components are attached to the device. Ensure that the instruction signs are always clearly recognizable and easily legible. Any missing instruction signs or stickers must be replaced.

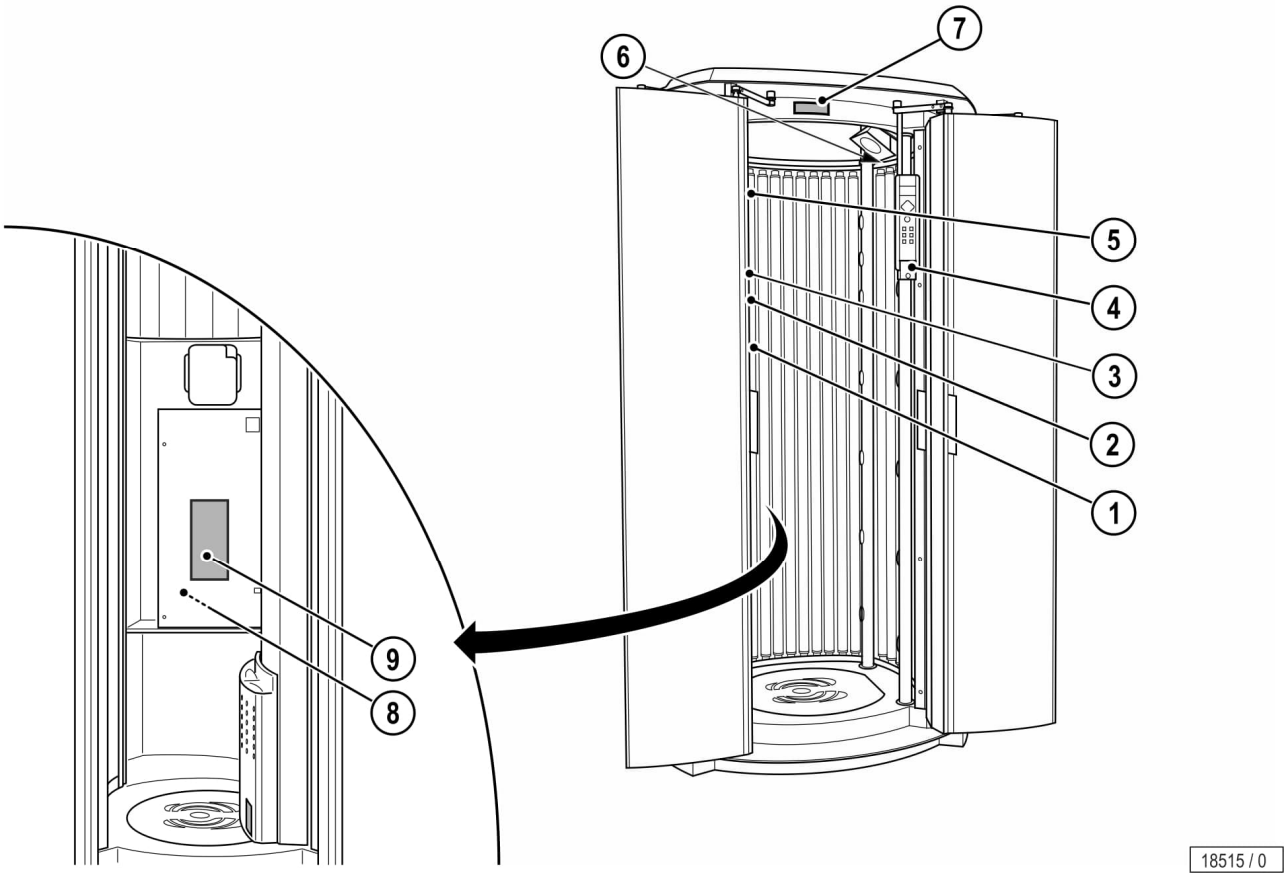

1: Standards (1031046-..)

This product is in conformity with
UL STD 482 and fulfils the
requirements for the exempt group
according to IEC 62471

JK - Part No: 1031046-00A

21076 / 0

2: Sticker (1014367-..)

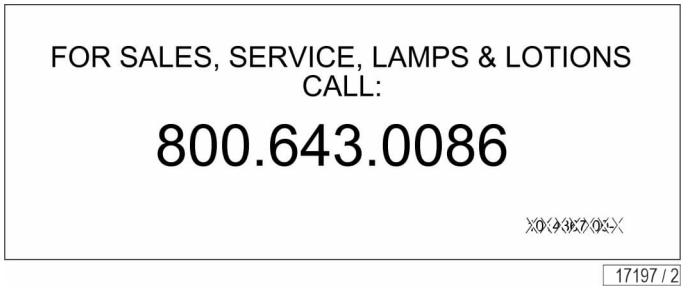

3: Name plate (example)

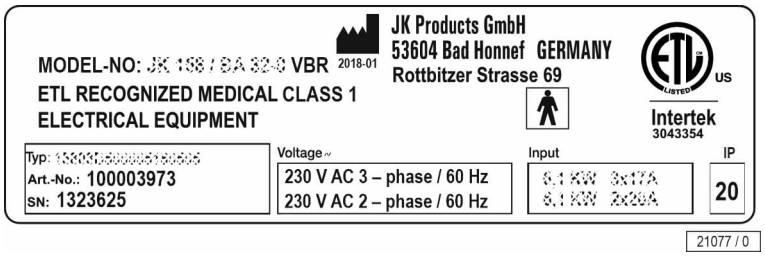

4: Sticker EMERGENCY OFF (1018687-..)

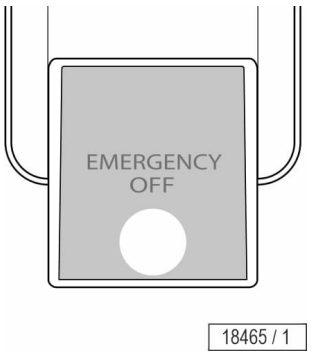

This sticker also includes the language form (see Technical Documentation folder).

5: Non-UV lamps only sticker (1014462-..)

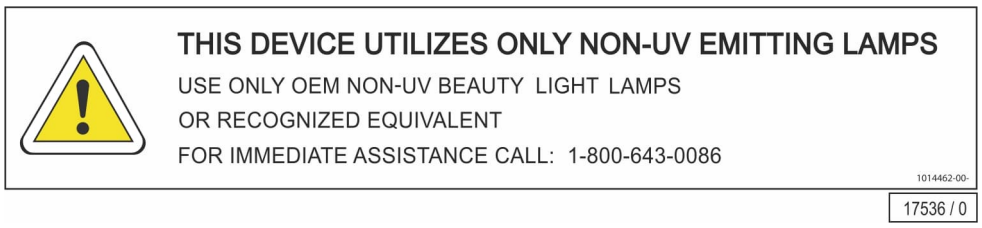

The sticker is located inside the device.

6: Sticker 'Follow Operating Instructions' (1014232-..)

7: Maximum session time label (1018509-..)

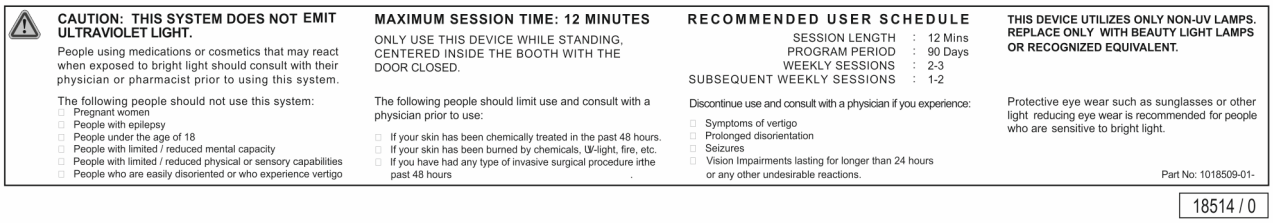

CAUTION: THIS SYSTEM DOES NOT EMIT ULTRAVIOLET LIGHT.

People using medications or cosmetics that may react when exposed to bright light should consult with their physician or pharmacist prior to using this system.

The following people should not use this system:
- Pregnant women
- People with epilepsy
- People under the age of 18
- People with limited / reduced mental capacity
- People with limited / reduced physical or sensory capabilities
- People who are easily disoriented or who experience vertigo

MAXIMUM SESSION TIME: 12 MINUTES

ONLY USE THIS DEVICE WHILE STANDING, CENTERED INSIDE THE BOOTH WITH THE DOOR CLOSED.

The following people should limit use and consult with a physician prior to use:
- If your skin has been chemically treated in the past 48 hours.
- If your skin has been burned by chemicals, UV-light, fire, etc.
- If you have had any type of invasive surgical procedure irthe past 48 hours

RECOMMENDED USER SCHEDULE

SESSION LENGTH	:	12 Mins
PROGRAM PERIOD	:	90 Days
WEEKLY SESSIONS	:	2-3
SUBSEQUENT WEEKLY SESSIONS	:	1-2

Discontinue use and consult with a physician if you experience:
- Symptoms of vertigo
- Prolonged disorientation
- Seizures
- Vision Impairments lasting for longer than 24 hours or any other undesirable reactions.

THIS DEVICE UTILIZES ONLY NON-UV LAMPS. REPLACE ONLY WITH BEAUTY LIGHT LAMPS OR RECOGNIZED EQUIVALENT.

Protective eye wear such as sunglasses or other light reducing eye wear is recommended for people who are sensitive to bright light.

Part No: 1018509-01-

18514 / 0

8: USA mains connection sticker (1510692-..)

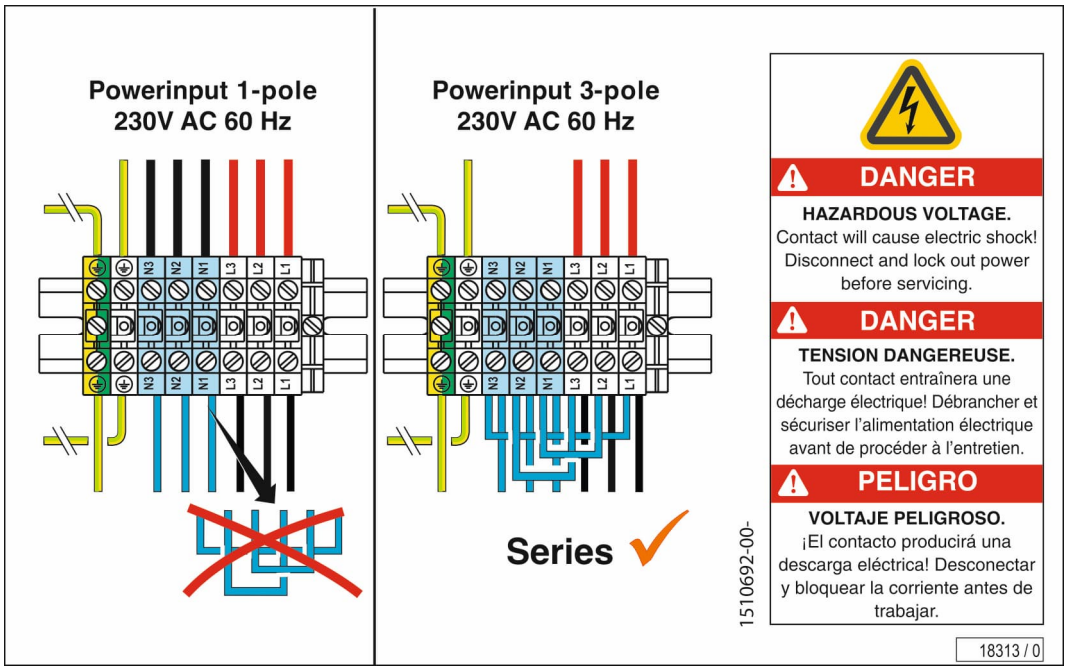

The sticker is located on the lid below the cover.

9: Sticker component control USA 1510516-..

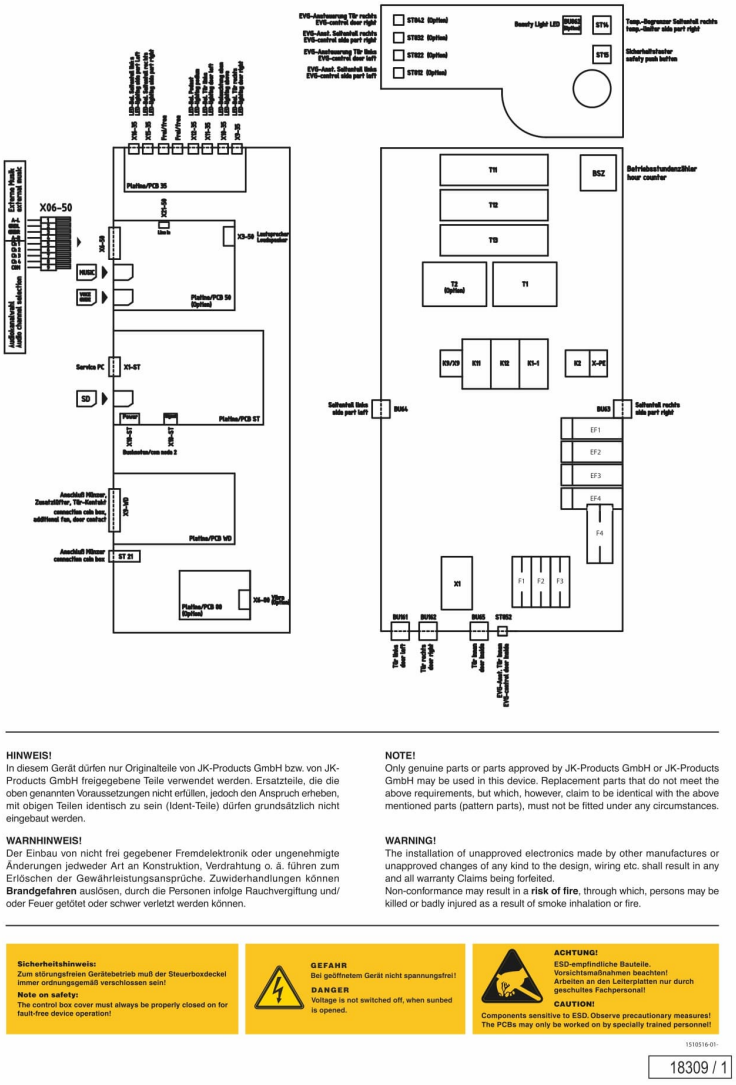

HINWEIS!
In diesem Gerät dürfen nur Originalteile von JK-Products GmbH bzw. von JK-Products GmbH freigegebene Teile verwendet werden. Ersatzteile, die die oben genannten Voraussetzungen nicht erfüllen, jedoch den Anspruch erheben, mit obigen Teilen identisch zu sein (Ident-Teile) dürfen grundsätzlich nicht eingebaut werden.

WARNHINWEIS!
Der Einbau von nicht frei gegebener Fremdelektronik oder ungenehmigte Änderungen jedweder Art an Konstruktion, Verdrahtung o. ä. führen zum Erlöschen der Gewährleistungsansprüche. Zuwiderhandlungen können **Brandgefahren** auslösen, durch die Personen infolge Rauchvergiftung und/ oder Feuer getötet oder schwer verletzt werden können.

NOTE!
Only genuine parts or parts approved by JK-Products GmbH or JK-Products GmbH may be used in this device. Replacement parts that do not meet the above requirements, but which, however, claim to be identical with the above mentioned parts (pattern parts), must not be fitted under any circumstances.

WARNING!
The installation of unapproved electronics made by other manufactures or unapproved changes of any kind to the design, wiring etc. shall result in any and all warranty Claims being forfeited.
Non-conformance may result in a **risk of fire**, through which, persons may be killed or badly injured as a result of smoke inhalation or fire.

Sicherheitshinweis:
Zum störungsfreien Gerätebetrieb muß der Steuerboxdeckel immer ordnungsgemäß verschlossen sein!

Note on safety:
The control box cover must always be properly closed on for fault-free device operation!

GEFAHR
Bei geöffnetem Gerät nicht spannungsfrei!

DANGER
Voltage is not switched off, when sunbed is opened.

ACHTUNG!
ESD-empfindliche Bauteile.
Vorsichtsmaßnahmen beachten!
Arbeiten an den Leiterplatten nur durch geschultes Fachpersonal!

CAUTION!
Components sensitive to ESD. Observe precautionary measures!
The PCBs may only be worked on by specially trained personnel!

18309 / 1

The sticker is located on the lid below the cover.

3.10 Technical data

3.10.1 Power rating, electrical specifications and noise level

JK 194 / RV 32-10 VBR or JK 194 / RV 32-10			
Power consumption rating:	6400 W		
Rated frequency:	60 Hz		
Rated voltage:	230 V 3 phase		230 V 2 phase[1)]
Rated overcurrent protection device	30 amp 3-pole*	or	40 amp 2-pole*
Power supply:	4 x THHN AWG 10[2)]	or	3 x THHN AWG 10[2)]
Classification:	Class 1		
Temperature of the foot mat:	maximum 119 °F (48 °C), if ambient temperature is 90°F (32 °C)		
Protection against electric shock:	Class I		
Rated maximum output power Bluetooth module:	normal mode: 5.26 dBm (e.i.r.p.) EDR mode: 3.01 dBm (e.i.r.p.)		
Noise level inside the device:	70 dB(A)		
Noise level 1m away from device:	<71.6 dB(A)		
Load on the base plate: / foot mat, silicone:	max. 330 lbs / 150 kg		
Weight::	approx. 1202 lbs / 545 kg		
Max. humidity:	70%		
Ambient temperature:	59-90°F (15-32 °C)		
Max. operating altitude (above sea level):	6,500 ft (2,000 m)		

* Due to high inrush current caused by the electrical components used, such as ballasts, power supplies, etc., the units must be protected by slow-blow fuses.
When using circuit breakers, make sure that they have tripping characteristic D or similar.

[1)] For 2-phase installation, you need a special conversion box for the device to be operated. Please contact the customer service department before putting the device into operation - see page 2.

[2)] Wire size is dependent on local electrical code. Please check with your local electrician or inspector to ensure proper size is used.

NOTE:

Adaptation of the unit is required for operating altitudes greater than 6,500 ft / 2,000 m above sea level in order to guarantee trouble-free operation.

3.10.2 Dimensions

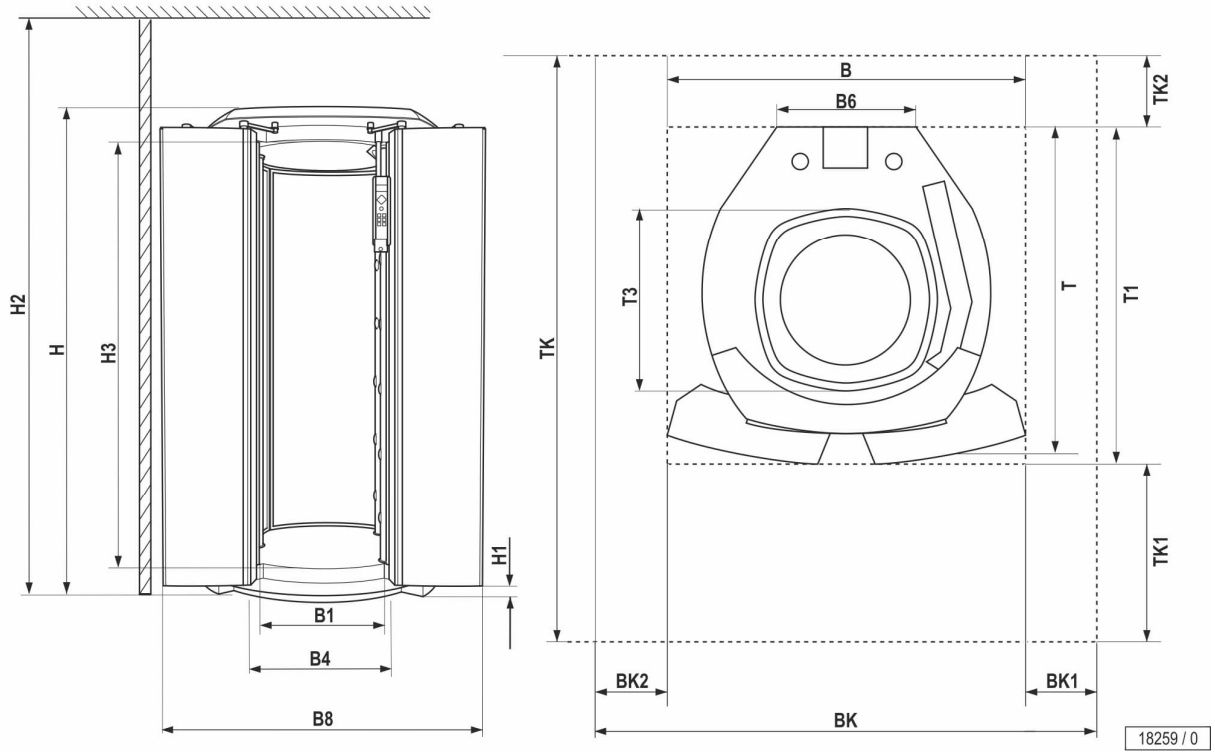

BK =	1,935 mm	76,18 in
BK1 =	346 mm	13,64 in
BK2 =	346 mm	13,64 in
TK =	2,400 mm	94,49 in
TK1 =	730 mm	28,74 in
TK2 =	300 mm	11,81 in
B =	1,242 mm	48,90 in
B6 =	590 mm	23,23 in
B1 =	580 mm	22,83 in
B4 =	760 mm	29,92 in
B8 =	1,440 mm	56,69 in
T =	1,340 mm	52,76 in
T1 =	1,370 mm	53,94 in
T3 =	770 mm	30,31 in
H =	2,315 mm	91,14 in
H1 =	145 mm	5,71 in
H2 =	2,400 mm	94,49 in
H3 =	2,170 mm	85,43 in

3.10.3 Lamp configuration

CAUTION!

USE ONLY the specified NON-UV lamps! The conformity declaration and the ETL Intertek test mark only apply for the specified lamps. The mark is voided if other lamps are used. Use of UV lamps in this device is a violation of 21 CFR 1040.20, FDA.

Model No. JK 194 / RV 32-10 VBR or JK 194 / RV 32-10

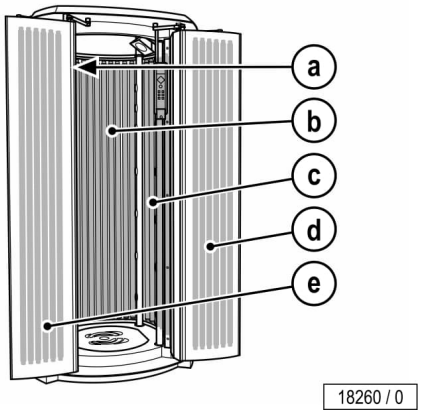

Lamp set

	Number	Description	Length	Power	Control	Order-no.
a)	8	Low-pressure lamps RED LIGHT TECHNOLOGY FR2.0M-T12-RL-180W	2,00 m	180 W	180 W	1516191-..
b)	8	Low-pressure lamps RED LIGHT TECHNOLOGY FR2.0M-T12-RL-180W	2,00 m	180 W	180 W	1516191-..
c)	8	Low-pressure lamps RED LIGHT TECHNOLOGY FR2.0M-T12-RL-180W	2,00 m	180 W	180 W	1516191-..
d)	4	Low-pressure lamps RED LIGHT TECHNOLOGY FR2.0M-T12-RL-180W	2,00 m	180 W	180 W	1516191-..
e)	4	Low-pressure lamps RED LIGHT TECHNOLOGY FR2.0M-T12-RL-180W	2,00 m	180 W	180 W	1516191-..

3.10.4 Accent lighting

Not applicable for this device.

3.10.5 Spare parts

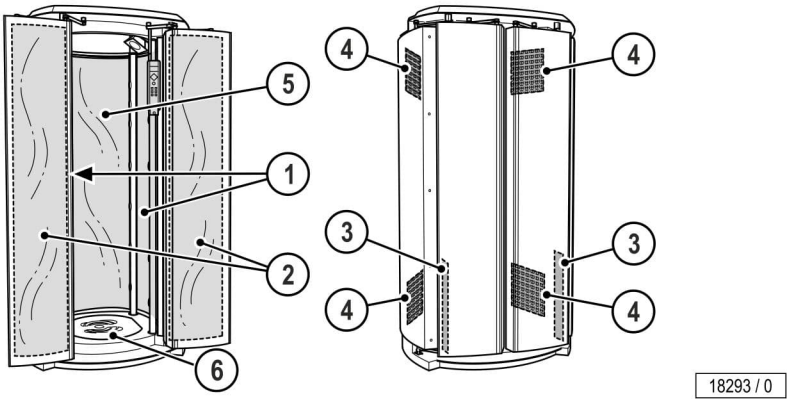

	Number	Description	Order-no.
1	2	Acrylic panels (side panels)	1510487-..
2	2	Acrylic panels (doors)	1510485-..
5	2	Acrylic panels (door, inside)	1510486-..
	1	Protective goggles	1007934-..
	1	AUX cable	1001855-..
	1	Allen key	83828-..
3	2	Filter mats	1510494-..
4	4	Filter	51937-..
6	1	Foot mat (silicone)	1506532-..

For more spare parts, contact Customer Service (see page 2).

4 Why you use it

4.1 Intended use

RedWave Recovery Pro

This device is used for the application of near infrared and red-light technology for one person at a time.

The device may not be used by people with reduced physical, sensory or mental capabilities or who have insufficient experience and/or knowledge without supervision. A person responsible for their safety must ensure, either by supervision or instruction, that the device is used correctly and safely. If there is any doubt, use of the device by such categories of persons is forbidden! This device is only to be operated with the specified lamps and LEDs or their equivalent. The usage times given in these operating instructions are valid only for the specified lamps and LEDs.

Any other use shall be considered improper. The manufacturer cannot be held liable for damage or injuries resulting from this. The operator bears the sole risk for this.

Proper use also includes compliance with the manufacturer's instructions and its operating and maintenance conditions. The device may only be operated, maintained and repaired by persons familiar with these tasks and who have been informed of the dangers involved.

4.2 Skin condition

Not applicable for this device.

5 Who cannot use it

5.1 Prohibited usage

5.1.1 RedWave Recovery Pro System

The following people must not use the device:

- Multiple people may not use the device at the same time.
- People with body weight of more than 330 lbs (150 kg) may not use the device.
- Persons taking medication that increase photosensitivity should not use this device. Review medication listings and labeling prior to use.
- No other persons are permitted in the vicinity of the cabin when using the device.
- ONLY NON-UV lamps may be used in this device!

– Seek medical advice if in doubt!

5.1.2 Vibra Shape (vibration plate)

Information about the Vibra Shape feature can be found in the separate document ‘OI Vibra Shape #1031045-..’ which is provided in the Technical Documentation folder.

6 What you must do to avoid serious harm

6.1 General

DANGER – HIGH VOLTAGE!

DANGER!

You can be killed or injured by an electric shock!

Assembly and electrical connection must comply with national and local regulations.

– The device may only be assembled, installed, upgraded or repaired by authorized, trained and qualified staff.

WARNING

WARNING!

Risk of electric shock!

– To avoid risk of electric shock, this equipment must only be connected to a mains supply with protective earth grounding.

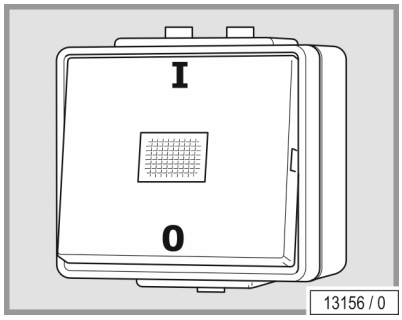

The electrical installation must have a freely accessible, all-pole disconnecting device (Master switch with clearly labelled On/Off settings, e.g. '0' and 'I' or additional indicator light) fitted externally on the site.

DANGER – HIGH VOLTAGE!

DANGER!

You can be killed or injured by an electric shock or injured by overheating!

Danger of overheating by obstruction of the air routing.

– No modification of this equipment is allowed.

6.2 RedWave Recovery Pro System

WARNING!

WARNING!

This device emits electromagnetic fields!

EM-Emission inside device:

–	5 Hz – 2 kHz	max. 2.1 µT (1.5 kV/m)
	2 kHz – 400 kHz	max. 3.3 µT (1.3 kV/m)
	9 kHz – 30 MHz	max. 35 dbµV/m (56 µV/m)
	30 MHz – 1 GHz	max. 95 dbµV/m (56 µV/m)
	1 GHz – 6 GHz	max. 90 dbµV/m (32 µV/m)

If you have an active implant or body worn medical device (e.g. insulin body pump, blood glucose sensor) consult your health care provider before use of this device.

If you have an active implant or body worn medical device (e.g. insulin body pump, blood glucose sensor) consult your health care provider before use of this device.

6.3 Sensor

Not applicable for this device.

7 What you must do to avoid other harm

7.1 General

WARNING!

WARNING!

Infections can be transferred through skin contact.

All items/equipment components, with which the user can come into contact during the application, must be cleaned and disinfected after every session:

- Protective goggles
- Fan
- Entry area
- Acrylic panels
- Handles and Control Center
- Use only EPA registered quaternary ammonium germicidal based detergent solution (follow product label for use-dilution), such as Lucasol One Step, to clean and disinfect the RedWave Recovery Pro and its components.

7.2 RedWave Recovery Pro System

WARNING!

WARNING!

Danger of long-term consequences!

The following people must not use this device:

- Pregnant women
- People who experience any negative effects from very bright light.
- Minors should gain parental consent prior to use.
- You should stop using the system if you experience any pain, discomfort or adverse reactions.

7.3 Sensor

Not applicable for this device.

7.4 Vibra Shape - vibration plate - (additional feature)

Information about the Vibra Shape feature can be found in the separate document ‘OI Vibra Shape #1031045-..’ which is provided in the Technical Documentation folder.

7.5 Foreseeable misuse

The following uses of the device are explicitly prohibited:

- Multiple people may not use the device at the same time.
- People with body weight of more than 330 lbs (150 kg) may not use the device.
- Persons taking medication that increase photosensitivity should not use this device. Review medication listings and labeling prior to use.
- No other persons are permitted in the vicinity of the cabin when using the device
- ONLY NON-UV lamps may be used in this device!

7.6 Obligations of the studio operator

As the operator you are responsible for providing clear operating, cleaning/disinfection and maintenance instructions. You are also responsible for ensuring the intended use and the proper operation of the device by means of training and instruction for the personnel and provision of all appropriate safety devices (including eyewear).

Your operating instructions must enable the safe use and safe operation of the device and take into account the characteristics and expertise of your company and also the national work safety and environmental protection regulations.

7.7 Staff training

As the operator you are obligated to train your personnel and instruct them in the established legal and accident prevention regulations. Ensure that your staff have understood and observe these instructions. This includes:

- information regarding intended use and foreseeable misuse
- safety instructions
- operating instructions
- cleaning/disinfection and maintenance instructions

– Please make the instructions and additional information from the manufacturer available to the staff at their workplace.
– Regularly check your staff's safety consciousness and awareness of the risks, taking into account your operating instructions.
– Please ensure that the cleaning/disinfection intervals are complied with, in particular cleaning and disinfection after every use.
– Please ensure that your staff provide your customers with appropriate advice, in particular regarding application times, possible risks and the operation of the device.

8 Risks of using this device

The following people must not use this system:

- People younger than 18
- Pregnant women
- People with epilepsy/prone to seizures
- People with limited/reduced mental capacity
- People with limited/reduced physical or sensory capabilities
- People with acute or chronic inflammation
- People with acute or chronic fever or pain

Minors should gain parental consent prior to use.

9 Benefits of using this device

RedWave Recovery Pro device

The JK 194 / RV 32-10 VBR or JK 194 / RV 32-10 benefits the user by enhancing a healthy lifestyle and general wellness.

Vibra Shape (additional feature)

Information about the Vibra Shape feature can be found in the separate document ‘OI Vibra Shape #1031045-..’ which is provided in the Technical Documentation folder.

10 How to decide to use this device

This device is intended only for commercial use and not for private use.

Some people are not permitted to use the device, see chapter 5.

The device may not be used by people with reduced physical, sensory or mental capabilities or who have insufficient experience and/or knowledge without supervision. A person responsible for their safety must ensure, either by supervision or instruction, that the device is used correctly and safely. If there is any doubt, use of the device by such categories of persons is to be forbidden!

11 What to do before the application

Please check for any conditions that may prohibit the use of this device – see chapters 5, 6, 8, 10.

Before the RED LIGHT TECHNOLOGY lamps turn on, you have a few minutes to prepare yourself. During the preparation time you can switch on the lamps and LEDs at any time by pressing the START/STOP button.

– Remove your clothes and all jewelry.
– Remove make-up and other cosmetics.
– Remove glasses. Contact lenses can be worn under the protective goggles.
– Put on the protective goggles.

12 How to use this device

12.1 How to set this device up

After commissioning and cleaning/disinfection, the device is ready for operation.

See chapter 12.5.

12.2 How to make sure the device works

Before using the device, check for damage to acrylic panels and for damage to foot mat.

12.3 How to use it to treat your condition

The JK 194 / RV 32-10 VBR or JK 194 / RV 32-10 benefits the user by enhancing a healthy lifestyle and general wellness.

12.4 How to choose correct application regimen

12.4.1 Application times

Applications per week	Moderate schedule	Intensive schedule
	[Number]	[Number]
1. Week	2	3
2. Week	2	3
3. Week	2	3
4. Week	2	3
5. Week	2	3
6. Week	2	3
7. Week	2	3
8. Week	2	3
9. Week	2	3
10. Week	2	3
11. Week	2	3
12. Week	2	3
After application:	1-2 x per week	

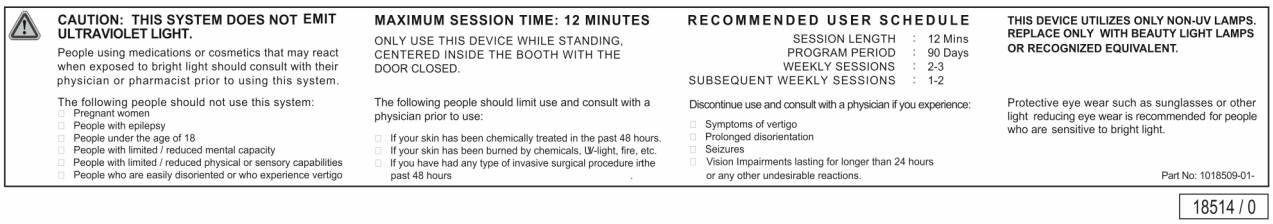

CAUTION: THIS SYSTEM DOES NOT EMIT ULTRAVIOLET LIGHT.

People using medications or cosmetics that may react when exposed to bright light should consult with their physician or pharmacist prior to using this system.

The following people should not use this system:
- Pregnant women
- People with epilepsy
- People under the age of 18
- People with limited / reduced mental capacity
- People with limited / reduced physical or sensory capabilities
- People who are easily disoriented or who experience vertigo

MAXIMUM SESSION TIME: 12 MINUTES

ONLY USE THIS DEVICE WHILE STANDING, CENTERED INSIDE THE BOOTH WITH THE DOOR CLOSED.

The following people should limit use and consult with a physician prior to use:
- If your skin has been chemically treated in the past 48 hours.
- If your skin has been burned by chemicals, UV-light, fire, etc.
- If you have had any type of invasive surgical procedure irthe past 48 hours

RECOMMENDED USER SCHEDULE

SESSION LENGTH	:	12 Mins
PROGRAM PERIOD	:	90 Days
WEEKLY SESSIONS	:	2-3
SUBSEQUENT WEEKLY SESSIONS	:	1-2

Discontinue use and consult with a physician if you experience:
- Symptoms of vertigo
- Prolonged disorientation
- Seizures
- Vision Impairments lasting for longer than 24 hours or any other undesirable reactions.

THIS DEVICE UTILIZES ONLY NON-UV LAMPS. REPLACE ONLY WITH BEAUTY LIGHT LAMPS OR RECOGNIZED EQUIVALENT.

Protective eye wear such as sunglasses or other light reducing eye wear is recommended for people who are sensitive to bright light.

Part No: 1018509-01-

18514 / 0

The sticker is located inside the device.

12.5 How to operate the device

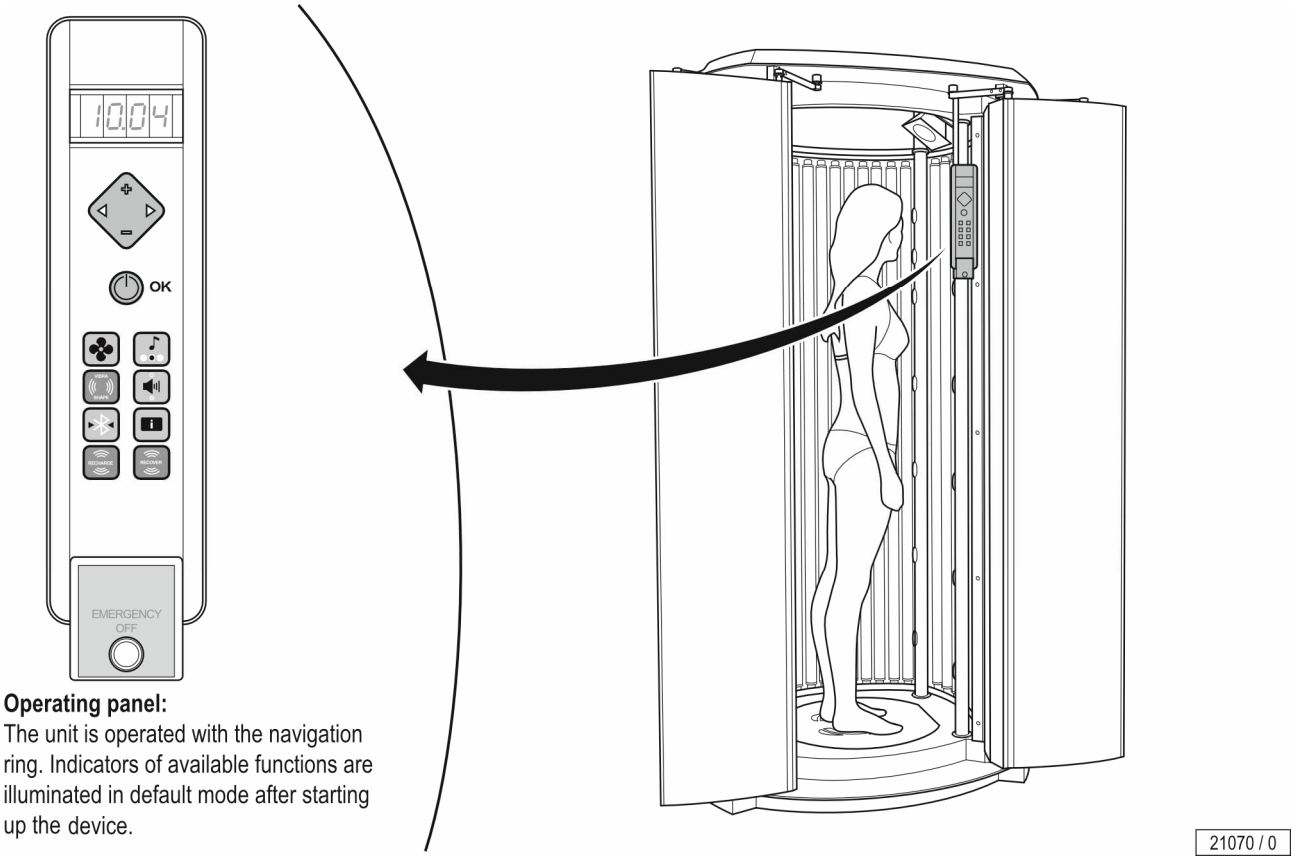

Operating panel:
The unit is operated with the navigation ring. Indicators of available functions are illuminated in default mode after starting up the device.

12.5.1 Control Center

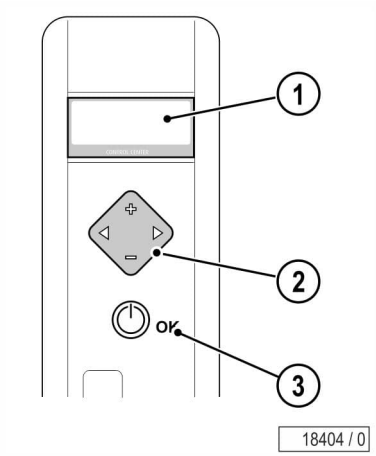

1. Display – Functions ...
2. Feature selection
3. OK button (not always visible)

12.5.2 User settings overview

Not applicable for this device.

12.6 Functions

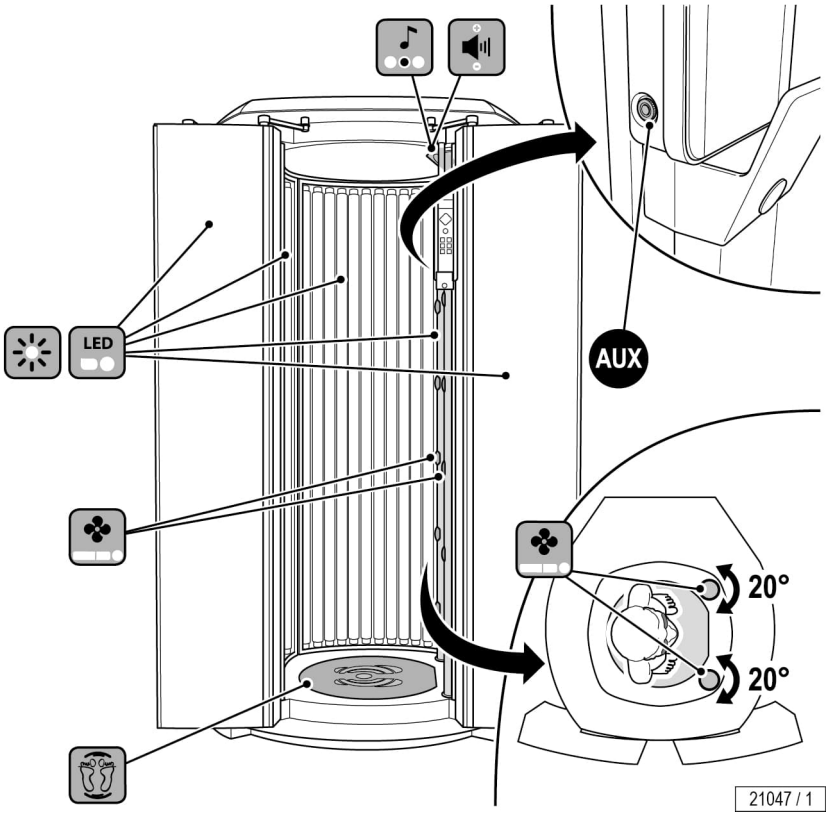

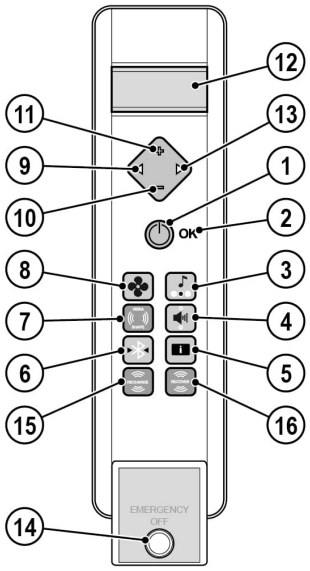

1. START/STOP button
2. OK button (not always visible)
3. Audio system pictogram
4. Volume pictogram
5. VOICE GUIDE pictogram
6. Bluetooth® pictogram (only before application)
7. Vibra Shape (additional feature) pictogram
8. Body cooling pictogram
9. Left navigation arrow button
10. Minus button
11. Plus button
12. Display – Functions ...
13. Right navigation arrow button
14. EMERGENCY OFF button
15. Vibra Shape 'RECHARGE' (additional feature) pictogram
16. Vibra Shape 'RECOVER' (additional feature) pictogram

12.6.1 Navigation

Via the Control Center the most important settings can be made before starting the device. During the application session, functions may be activated or deactivated via the control panel inside the device.

Navigation unit - Control Center

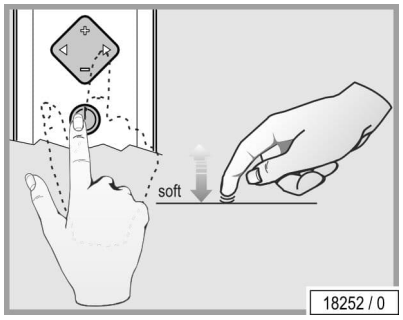

The Control Center enables comfortable access to special functions.

Acknowledge selection.
This button's availability is displayed on the operating panel, depending on the function that has been selected.

Acknowledge selection.
This button's availability is displayed on the operating panel, depending on the function that has been selected.

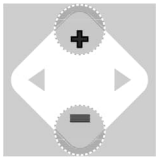

Select device function.

Pictograms of available functions are illuminated in default mode after starting up the RedWave Recovery Pro-device. After selecting a function, the corresponding indicator flashes for a short time. During this time settings may be changed.

Information about the setting options can be found in the separate document 'Professional Setup Manager' 1014640-.. which is provided in the Technical Documentation folder.

NOTE:
Only for the studio operator:
To open the Professional Setup Manager, press button − for approximately 3 seconds in standby mode.

All of the pictograms displayed on the screen are illuminated in default mode after the device starts up.

The relevant pictogram will start to flash after a device function has been selected. The settings or selection options available for the selected function will be displayed on the screen.

NOTE:

Pressing and holding + button for 3 seconds activates the demo mode. This allows you to demonstrate the following functions without the application.

NOTE:
If no button is pressed within 8 seconds, the settings return to default mode.

12.6.2 Description

Pictogram selection / key sequence	Navigation	Description / Display	Information
		START/STOP Switches the RedWave lamps and LEDs on / off during the application. The process is interrupted.	The application time continues to run if the RedWave lamps and LEDs are switched off during the application.
9 1		Regulate the body fan, levels 1-9	
14 0		Adjust volume: levels 0 - 14	
		Audio system SD card selection: Press the plus button Studio channel selection: Press the plus button Select own music, AUX or Bluetooth®: Press the plus button Switch off the audio system: Press the minus button	The +/- buttons can be used to select titles for internal music in demo mode and during application. The +/- buttons can be used to select titles for internal music in Bluetooth® mode and during application.
		Switch off VOICE GUIDE: Press the minus button Switch on VOICE GUIDE: Press the plus button	The VOICE GUIDE provides acoustic device operation assistance and is only available if an audio system is fitted. VOICE GUIDE is switched on by default during stand-by and the application.
		Switch off Bluetooth®: Press the minus button Switch on Bluetooth®: Press the plus button	

Pictogram selection / key sequence	Navigation	Description / Display	Information
EMERGENCY OFF		EMERGENCY OFF	In standby, the EMERGENCY OFF button does not have any function. If the EMERGENCY OFF button is pressed, the device shuts down except for the control element. In this state, the display indicates that the EMERGENCY OFF button has been pressed. The application time is ended. The Voice Guide verbally navigates the user through the EMERGENCY OFF function. The EMERGENCY OFF can only be cancelled after a locking period of 2 seconds. Then the device starts again.
0			Vibra Shape (additional feature) Information about the Vibra Shape feature can be found in the separate document 'OI Vibra Shape #1031045-..' which is provided in the Technical Documentation folder.
1		Program 1: Press the plus button	
2		Program 2: Press the plus button	
3		Program 3: Press the plus button	
4		Program 4: Press the plus button	

12.7 Operating display of the sensor

Not applicable for this device.

12.8 Selection of the application

Vibra Shape (additional feature)

Information about the Vibra Shape feature can be found in the separate document ‘OI Vibra Shape #1031045-..’ which is provided in the Technical Documentation folder.

12.9 Sun Select setting with the outer interface

Not applicable for this device.

12.10 Measurement (automatic mode)

Not applicable for this device.

12.11 Connections

WARNING!

WARNING!

Danger of hearing damage!

Using earphones or headphones at high volume can result in permanent hearing damage.

– Do not set the volume too high.

12.11.1 Couple with Bluetooth® devices

The user can connect their own private smartphone with Bluetooth® to the device.

Coupling between the unit and the private smartphone of the user is possible via Bluetooth®[1] Connect or with the stereo jack plug. When using Bluetooth Connect, the user can transfer their favorite music into the solarium wireless (e.g.) from their smartphone. The operation is carried out during the application session conveniently via the Control Center.

NOTE:

- JK cannot guarantee full compatibility with all Bluetooth® devices.
- Before coupling a device with this system, read the user manual to find out more about the Bluetooth® compatibility.
- Make sure that the Bluetooth® function is activated on your device and that the device is visible for all other Bluetooth® devices.

Connect to a Bluetooth® player

Activate the Bluetooth® function and search for Bluetooth® devices.

Activate the Bluetooth® function on the iPhone®:

iPhone®:

Settings → General → Bluetooth® → ON (search for units is started.)

Activate the Bluetooth® function on the Android® smartphone:

Android® smartphone:

Press the Bluetooth® symbol → SCAN (search for units is started.)

NOTE:

The device can store a maximum of ten coupled Bluetooth® devices. In the event of recoupling the device must first be deleted from the Bluetooth® device. The activation process must then be repeated.

[1] Communication system: IEEE 802.15 WPAN Bluetooth® class II version 3.0 compatible with Bluetooth version 2.1+EDR, 1.2, and 1.1; max. operating range: approx. 10 m; frequency range: 2,4 GHz range (2,4000 GHz – 2,48 GHz); compatible Bluetooth® profiles: A2DP, AVRCP;equipment supported at the same time (Pairing): one device

Activate Bluetooth® Connect on the Control Center

– Press the Bluetooth® symbol on the Control Center.

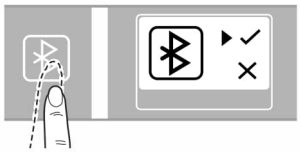

– Activate Bluetooth® Connect on your audio device.
– Select e.g. RedWave Recovery Pro 01.

Successful coupling on the Control Center.

NOTE:
Start with the audio player music on the Bluetooth® player.

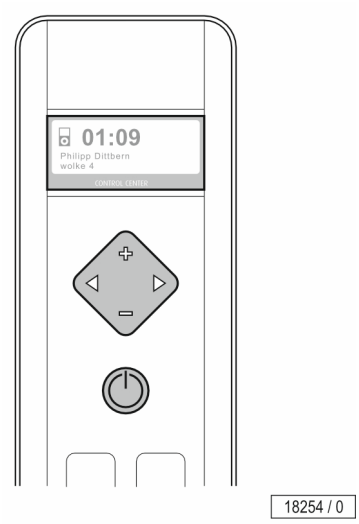

Display in the control panel in a successful coupling.

NOTE:
When successfully coupled, the Bluetooth® symbol lights up continuously blue.

The Bluetooth® function only works inside the device. Outside of the device reception interference may occur.

12.11.2 Smartphone

CAUTION!

The heat might damage your smartphone!

– Do not place the unit directly in the radiation area.

The cable might tear, the connectors might be damaged.

– Do not pull on the cable when unplugging the smartphone.

The user can connect their own private smartphone with Bluetooth® to the device.

1. Jack plug (JK Part # 4630911001-..) provided for use by the studio operator (2 x 3.5 mm stereo jack plug).
2. Smartphone connection: see the documentation from the manufacturer of the smartphone.

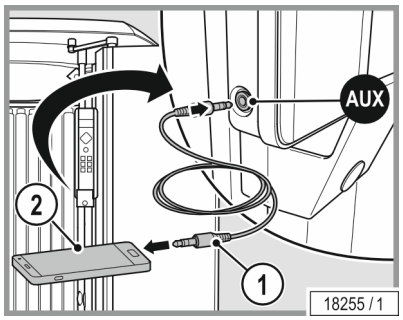

Connecting:

– Insert the AUX cable (stereo jack plug) in the audio system.
– Plug the AUX cable into the smartphone.
– Select the music title and then start.
– Where necessary, set the volume level on smartphone so that the sound signal from the smartphone is recognized by the audio system.
– Presetting: approx. 75% of the volume on the smartphone.

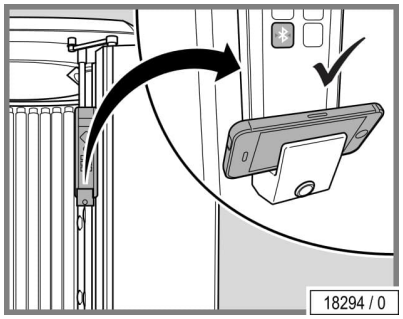

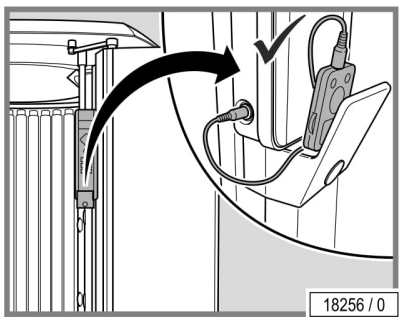

– Coupling a smartphone with the device via Bluetooth®: see page 47.

NOTE:

The personal use of an music files during tanning is not a public broadcast in copyright terms, so that there is no obligation for registration or payment by the studio owner to the corresponding copyright owning company. Copy right laws apply to the owner of the music files.

The same regulations apply for the official use of music files as for other music sources: As studio owner you are only allowed to use original audio obtained from legal sources. Proof of the legitimacy of any audio used should be available for viewing upon demand of any regulatory body. Please refer to http://www.riaa.com for more information.

12.12 How to use

NOTE:
Before use the device must always be cleaned and disinfected! See chapter 12.15 How to clean/disinfect.

12.12.1 How to start

The device is started automatically with an internal or external timer.

NOTE:
See separate document 'Timer Control Module' #1030705-.. in the Technical Documentation folder.

Preparation time

Before the RedWave lamps turn on, you have a few minutes to prepare yourself. During the preparation time you can switch on the RedWave lamps at any time by pressing the START/STOP button .

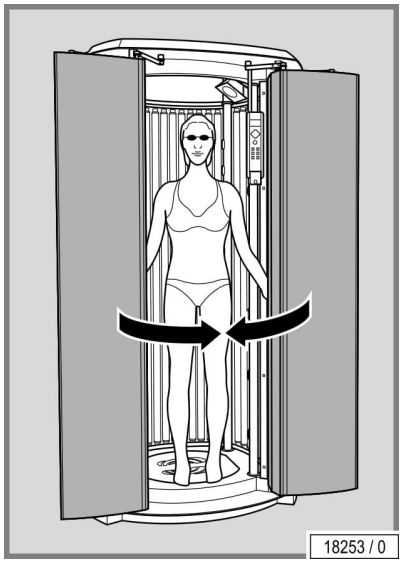

– Remove your clothes and all jewelry.
– Remove make-up and other cosmetics.
– Remove glasses. Contact lenses can be worn under the protective goggles.
– Put on the protective goggles.
– Close the door.
– Stand upright in the center of the RedWave Recovery Pro system.
– Press the START/STOP button.

Settings on start-up:

- RED LIGHT TECHNOLOGY lamps and LEDs
- Body cooling
- Audio system (optional)
- Voice Guide (optional)

12.12.2 Application tips

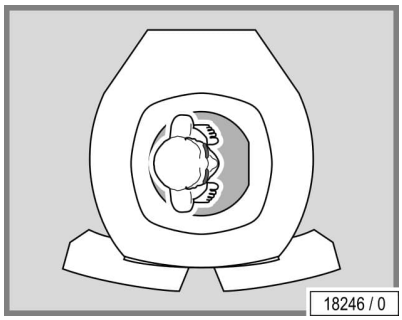

Behavior before, during and after an application:

- No other persons are permitted in the vicinity of the cabin when using the device.
- Remove all jewelry (including piercings) prior to the application.
- Remove cosmetics before using the device and do not use sun screen products.
- Wear protective eyewear that limits or reduces the intensity of bright light and these wavelengths during use.
- Always comply with the recommended application times.

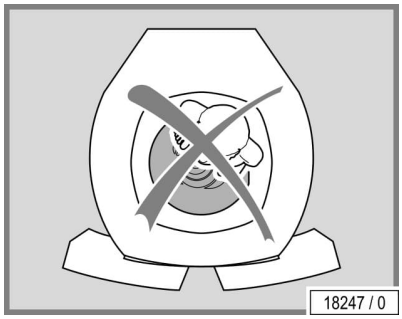

JK 194 / RV 32-10 VBR or JK 194 / RV 32-10

- Stand up straight and in the center of the device during the application.

Vibra Shape (additional feature)

Information about the Vibra Shape feature can be found in the separate document ‘OI Vibra Shape #1031045-..’ which is provided in the Technical Documentation folder.

12.12.3 How to stop

The session ends automatically after the preset time has run down. The internal body cooling fan continues to run for approx. three (3) minutes to sufficiently cool the device.

– To interrupt a session, press and hold button START/STOP anytime during a session.
– Press START/STOP again to restart the lamps and LEDs.

NOTES:

In standby, the EMERGENCY OFF button does not have any function. If the EMERGENCY OFF button is pressed, the device shuts down except for the operating panel. In this state, the display indicates that the EMERGENCY OFF button has been pressed.

The Voice Guide verbally navigates the user through the EMERGENCY OFF function.

The EMERGENCY OFF can only be operated after a locking period of 2 seconds. Then the device starts again.

12.13 What to do after the application

12.13.1 Cleaning and disinfection

WARNING!

WARNING!

Infections can be transferred through skin contact.

All items/equipment components, with which the user can come into contact during the application, must be cleaned and disinfected after every session:

- Protective goggles
- Foot mat (silicone)
- Entry area
- Acrylic panels
- Handles and control panel
- AUX cable
- Use only EPA registered quaternary ammonium germicidal based detergent solution (follow product label for use-dilution), such as Lucasol One Step, to clean and disinfect the RedWave Recovery Pro and its components.

NOTE:

For thorough cleaning and disinfection, the product must be allowed to remain in contact with the surface being cleaned and disinfected for a specified amount of time.
This specified amount of time depends on the cleaner/disinfectant which is used. Follow the directions for use of the cleaner/disinfectant.
After this specified application time remove remaining cleaner/disinfectant from the surfaces of the device. Use a single-pass paper towel.

Once the remaining cleaner/disinfectant has been removed, perform a visual inspection for signs of any remaining cleaning solution, or areas still soiled. If either are remaining, repeat the cleaning process until a visual inspection can be successfully completed without the need for additional cleaning.

If any of the components listed above cannot be successfully cleaned and disinfected, they must be replaced.

12.14 Safety instructions for cleaning/disinfection and maintenance

DANGER – HIGH VOLTAGE!

You can be killed or injured by an electric shock!

During maintenance and service work there is a risk of touching live parts and receiving a fatal electric shock.

- The device must not be in use.
- Disconnect device from power supply before opening.
- Do not reach behind covers and do not open the device with the device switched on.
- Refit any safety devices (e.g. switches) after the work has been completed.

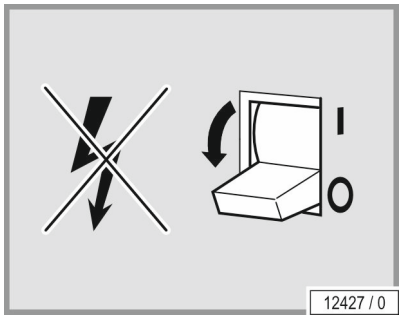

If work is to be performed on the devices, they must be deenergized. That means that all live cables must be switched off.

Switching off the device alone is insufficient, as certain points may remain energized. Therefore, switch off fuses before performing any work and – if possible – remove them.

Accidental reactivation can result in serious accidents. Immediately after deenergizing, secure all switches or fuses used for deenergizing against being switched on again.

- Lock the fuse box with a padlock.

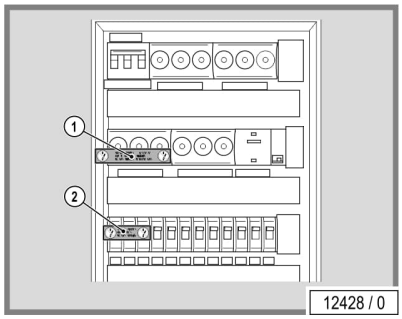

In case of circuit breakers which cannot be unscrewed, a strip of adhesive tape may be applied over the actuation lever (1 + 2) with the wording 'Do not switch, danger!'.

A prohibition sign with the text:

'Work in progress!'

'Place: .....'

'Sign may only be removed by: .....'

must always be securely mounted immediately.

It is imperative that you, the owner and/or operator, check all components for any signs of wear which may occur through normal use.

- Observe the cleaning/disinfection and maintenance schedule specified in the tables in chapter 12.15.2 and 12.16.2.
- Only replace low pressure lamps with the original type or compatible lamps.

Should you require any assistance or need additional information, please call Global Service USA at 800 445 0624,
Monday through Friday 8:00 a.m. - 5:00 p.m. CT.

NOTE:

The service of the device may only be carried out by a (Level 2) JK Factory Certified Technician.

WARNING!

WARNING!

Danger of burns from hot lamps and device parts!

If the RedWave Recovery Pro was operated before being switched off and opened, lamps and housing parts may be hot.

– Before replacing lamps or other spare parts, wait until lamps and metal parts of the device have cooled down sufficiently.

Danger of squeezing!

When opening and closing the panels and acrylics, you can squeeze your fingers.

Maintenance and care play a major role in deciding the devices performance and appearance over its useful life. Diligent compliance at the specified intervals is absolutely necessary to ensure the proper operation of your device.

The current operating hours of the parts requiring maintenance can be displayed in the Presetting mode – see separate document 'Professional Setup Manager' #1014640-.. in the Technical Documentation folder.

Please note that the device must be inspected regularly by a JK authorized representative every 12 months (from date of installation) to maintain its proper condition!

NOTE:

Please note, this device must be inspected a minimum of every 12 months from the original date of sale/installation in order to ensure all performance and safety requirements continue to be fulfilled!

Once the age of the device reaches ten (10) years from the date of manufacture, its condition must be assessed by a (Level 4) JK Factory Certified Technician before use of the device can be continued.

Failure to have this device assessment performed, may result in personal injury or property damage.

Any liability is excluded if use of the device continues ten (10) years after the date of manufacture, without the "condition assessment" having been performed.

12.15 How to clean/disinfect

WARNING!

WARNING!

Infections can be transferred through skin contact.

All items/equipment components, with which the user can come into contact during the application, must be cleaned and disinfected after every session:

- Protective goggles
- Foot mat (silicone)
- Entry area
- Acrylic panels
- Handles and control panel
- AUX cable
- Use only EPA registered quaternary ammonium germicidal based detergent solution (follow product label for use-dilution), such as Lucasol One Step, to clean and disinfect the RedWave Recovery Pro and its components.

NOTE:

For thorough cleaning and disinfection, the product must be allowed to remain in contact with the surface being cleaned and disinfected for a specified amount of time.
This specified amount of time depends on the cleaner/disinfectant which is used. Follow the directions for use of the cleaner/disinfectant.
After this specified application time remove remaining cleaner/disinfectant from the surfaces of the device. Use a single-pass paper towel.

Once the remaining cleaner/disinfectant has been removed, perform a visual inspection for signs of any remaining cleaning solution, or areas still soiled. If either are remaining, repeat the cleaning process until a visual inspection can be successfully completed without the need for additional cleaning.

If any of the components listed above cannot be successfully cleaned and disinfected, they must be replaced.

12.15.1 Cleaning and disinfection of surfaces

Acrylic panel

NOTICE!

Do not rub with a dry cloth – danger of scratching!

– Other cleaning agents, especially disinfectants or solvents (e.g. Lysoform, ethyl alcohol or other liquids containing alcohol) must never be used for cleaning.
  Failure to observe this voids all warranty claims.

Acrylic panels (5) referenced in section 12.15.2 'Cleaning/disinfection plan'

These panels are not in direct contact with the user, however they can become soiled if the user inadvertently touches them. If these panels are left soiled for an extended period of time, the heat and light from the RedWave lamps may cause the soiled areas to become permanently stained. Therefore we recommend frequently inspecting and cleaning these panels when necessary, to ensure the serviceable life of the acrylic.

– Remove fingerprints and other soiling carefully.

Plastic surfaces

For cleaning the remaining painted and unpainted plastic surfaces, it is best to simply use warm water and commercially available soft chamois leather. Never use aggressive cleaning agents containing alcohol or essential oils. These may lead, in the long run, to damages not covered by the warranty.

During cleaning a slight discoloration of the leather cloth by the rubber seals should be expected for production-related reasons.

Prevent damage to the acrylic glass and plastic surfaces.

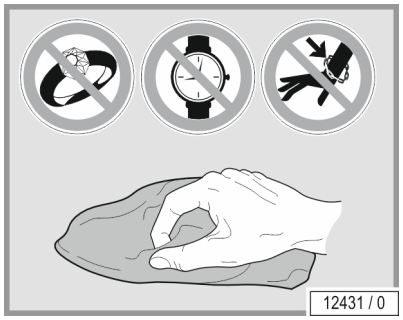

– Remove rings, watches, bracelets etc. before starting cleaning work.

Red Light & Near Infrared LEDs and lamps

- RED LIGHT TECHNOLOGY lamps can be cleaned with a damp cloth (without additional cleaning agents) where necessary.

12.15.2 Cleaning/disinfection plan

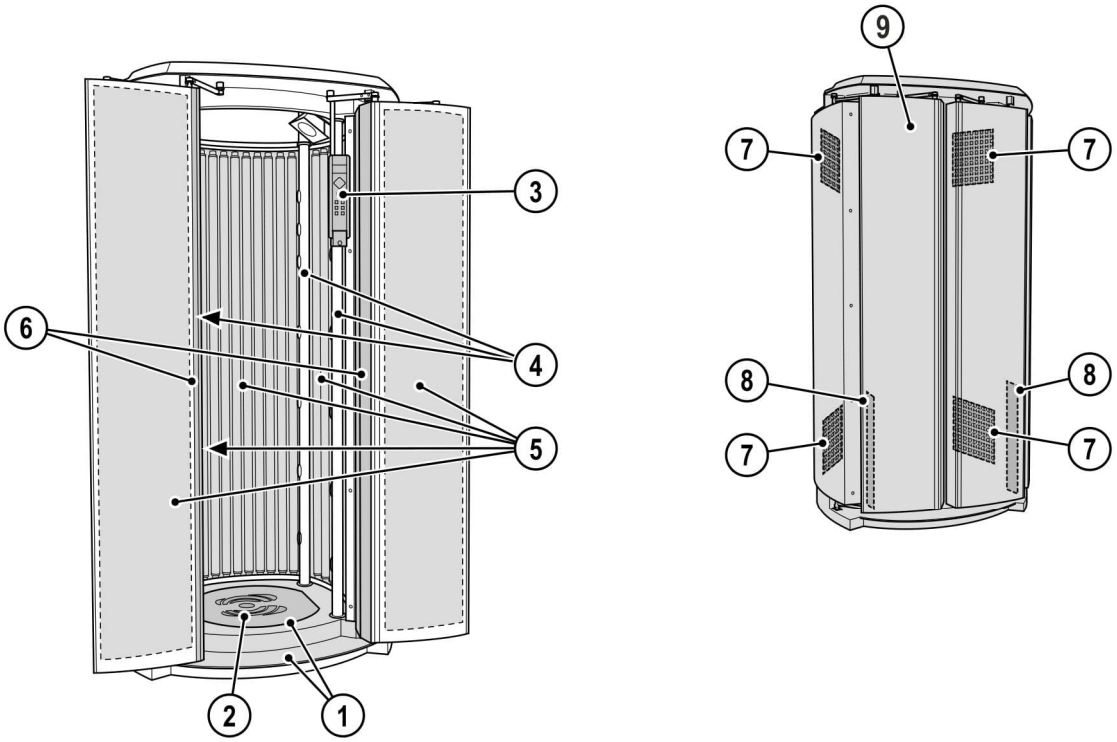

18257 / 1

	Component	Interval			Activity	See page
		After each application	When necessary	50 h		
1	Entry area	X			Clean and disinfect	56
2	Foot mat (silicone)	X			Clean and disinfect	56
3	Control Center	X			Clean and disinfect	56
4	Handles	X			Clean and disinfect	56
6	Door handles (outside / inside)	X			Clean and disinfect	56
	Protective goggles	X			Clean and disinfect	56
	AUX cable	X			Clean and disinfect	56
9	Surfaces		X		Clean	56
5	Acrylic glass panels		X		Clean	57
7	Filter			X	Remove and clean filter	74
8	Filter mats			X	Remove and clean filter mats	74

NOTE:

If desired, you may set the unit to require that cleaning/disinfection be confirmed after each session by pressing the START/STOP button (when the cool-down time for the main fan has finished).

12.16 How to maintain

12.16.1 Technical modifications

The device has been constructed in accordance with current safety regulations. The illustrations and specifications on these instructions are subject to technical modifications which are required in order to improve the device.

Unauthorized modifications and changes to the device and its control unit are prohibited.

Use only OEM spare parts.

12.16.2 Maintenance plan

NOTE:

The service of the device may only be carried out by a (Level 2) JK Factory Certified Technician.

NOTICE

Only use OEM spare parts of the same type! The use of other parts will void the manufacturer's warranty!

Any liability is excluded in case of damage or injury proven to be the result of the use of non-genuine spare parts.

The following maintenance activities shall be performed by the studio operator or a (Level 1) JK Factory Certified Technician.

The following items are considered consumables and should be replaced as noted. Replacement of these components helps ensure continued performance of the device.

Maintenance performed by the studio operator or a JK Factory Certified Technician

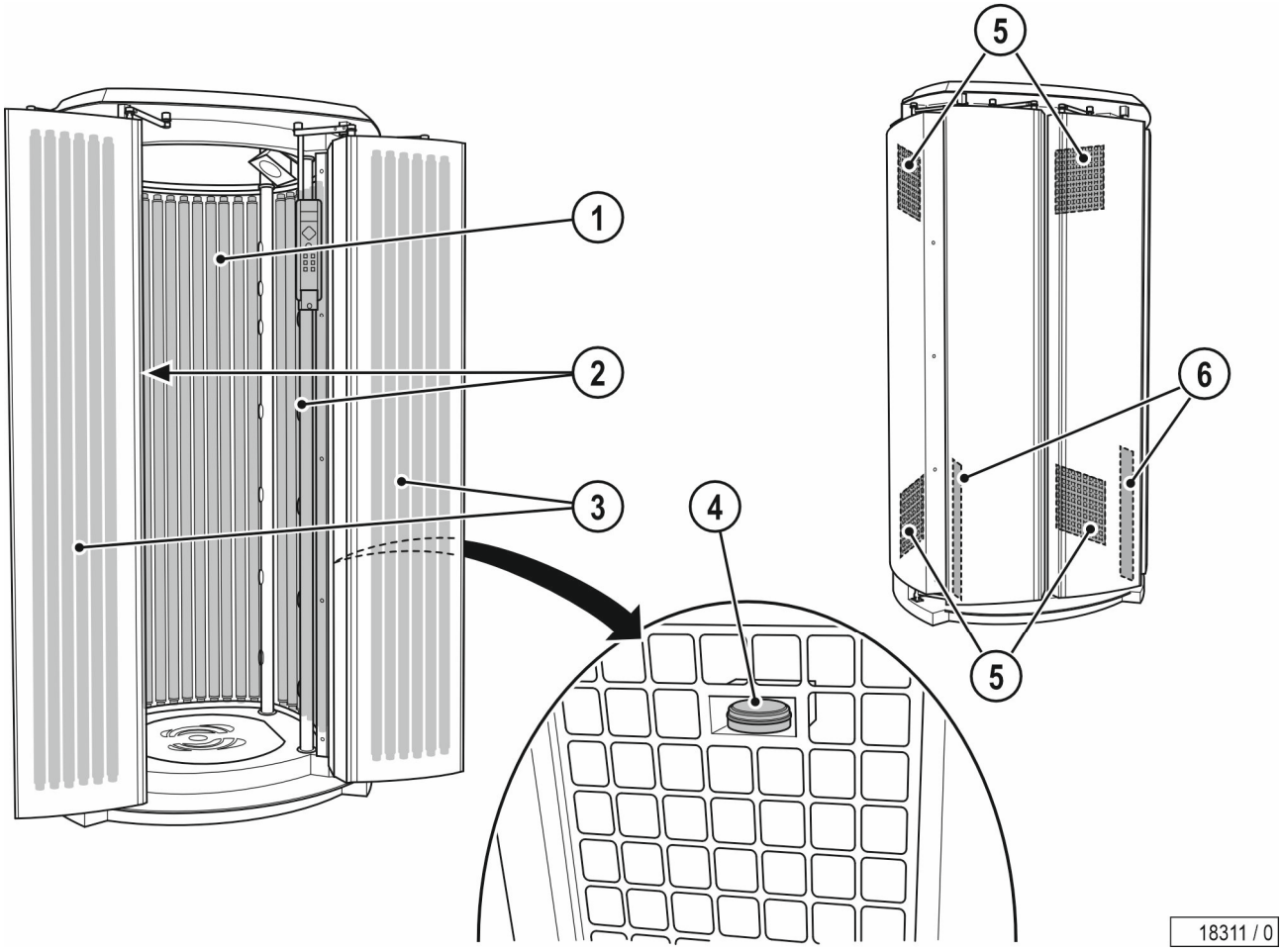

	Component	Interval				Activity	See page
		Before each use	800 operating hours	1000 operating hours	3000 operating hours		
1	Low pressure lamps, rear door		X			Replace	70
2	Low pressure lamps, side walls		X			Replace	70
3	Low pressure lamps, front doors		X			Replace	65
1	Acrylic panels, rear wall	X				Inspect and replace as necessary	65
2	Acrylic panels, side walls	X				Inspect and replace as necessary	70
3	Acrylic panels, doors	X				Inspect and replace as necessary	65
1	Acrylic panels, rear wall				X	Replace	65
2	Acrylic panels, side walls				X	Replace	70
3	Acrylic panels, front doors				X	Replace	65

	Component	Interval				Activity	See page
		Before each use	800 operating hours	1000 operating hours	3000 operating hours		
4	Filter				X	Replace	74
5	Filter mats			X		Replace	74
6	Foot mat (silicone)		X			Inspect and replace as necessary	

Maintenance performed by authorized, trained and qualified staff

WARNING!

WARNING!

Danger to persons from maintenance work that has not been carried out!

If maintenance work is not carried out, it can lead to material damage or personal injuries!

– Maintenance work may only be carried out by personnel who have been authorized, trained and qualified by JK Products & Services, Inc.!
– The operator is responsible for compliance with the maintenance intervals!

The maintenance work must be carried out in accordance with checklist 1019858-.. by a JK Factory Certified Technician at the manufacturer or by personnel who have been authorized, trained and qualified by the manufacturer.

The correctly carried out maintenance work must be entered and confirmed in checklist 1019858-...

The maintenance work must be carried out at the following intervals:

- Annually or every 2000 hours, whichever is sooner.
- After 5000 hours
- After 10 years or 20,000 hours, whichever is sooner.

Once the age of the device reaches ten (10) years from the date of manufacture, its condition must be assessed by a (level 4) JK Factory Certified Technician before use of the device can be continued.

Failure to have this device assessment performed may result in personal injury or property damage.

Any liability is excluded if use of the device continues ten (10) years after the date of manufacture, without the "condition assessment" having been performed.

12.16.3 Cleaning and maintenance work preparation

Not applicable for this device.

12.16.4 Instructions for replacing the lamps

WARNING!

WARNING!

Danger of burns from hot lamps and device parts!

If the RedWave Recovery Pro device was operated before being switched off and opened, lamps and housing parts may be hot.

– Before replacing lamps or spare parts, wait until lamps and metal parts of the device have cooled down sufficiently.

RED LIGHT TECHNOLOGY lamps

- Never replace with UV lamps of any type!
- Replace faulty lamps immediately.
- Always replace the entire set of lamps after the specified operating time.
- Call the customer service department to order replacement lamps or with any questions, see page 2.

– Turn 90° and carefully remove from the socket.

NOTE:

Small quantities of mercury can escape if the bulb/lamp glass breaks! Please comply with the following instructions:

- Immediately disconnect the device from the mains power.
- Children must leave the room immediately.
- Ventilate the room for at least 15 minutes.
- Put on disposable gloves.
- With the window open: Collect the glass shards and escaped mercury in a sealable container.
- Take the container to a collection site for waste lamps.

Changing the chip card

Not applicable for this device.

Low-pressure lamps

WARNING!

WARNING!

Danger of burns from hot lamps and device parts!

If the tanning device was operated before being switched off and opened, lamps and housing parts may be hot.

– Before replacing lamps or other spare parts, wait until lamps and metal parts of the device have cooled down sufficiently.

- Replace faulty low pressure lamps immediately.
- Always replace the entire set of lamps after the specified operating time.

– Turn 90° and carefully remove from the socket.

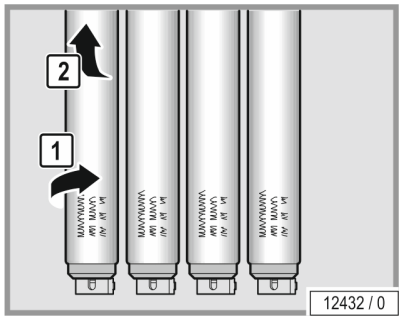

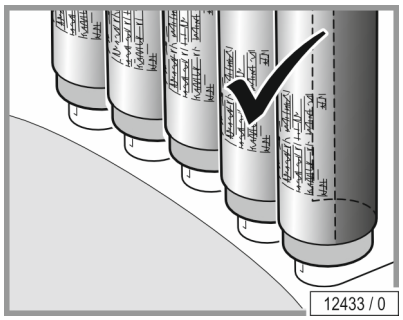

- Low pressure lamps possess a reflector which directs the light outwards.

– The lamps must be mounted in such a way that the rear side of the reflector is located on the device side.

CAUTION!

Risk of fire due to incorrect alignment of the lamps!

Incorrect alignment of the lamps leads to loose connections. This can cause overheating and sparking.

– Check that the socket is correctly aligned!

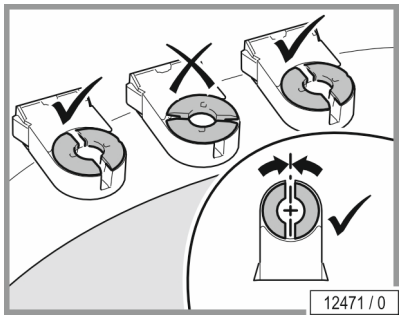

– Before inserting the new lamp, the alignment of the inner part of the socket must be checked.

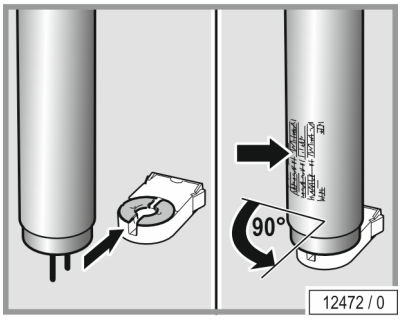

- Insert the contact pins of the lamps vertically into the socket from above.
- For correct contacting, the lamp must be rotated 90° around its own axis.
- The lettering must be oriented towards the outside (i.e. towards the tanning room or towards the user).

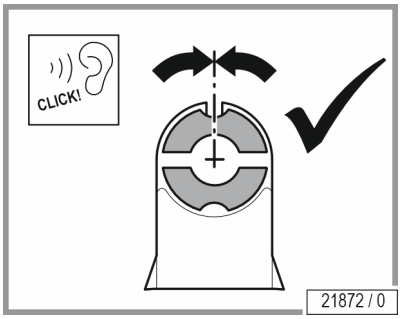

Makrolon tubes

Not applicable for this device.

Starter

Not applicable for this device.

High pressure lamps and filter panels

Not applicable for this device.

12.16.5 Cleaning and disinfection of the sensor

Not applicable for this device.

12.16.6 Cleaning or replacing lamps in the doors

NOTICE

Acrylic panels unusable due to soiling!

Soiling on the panels is burned in by the hot lamps and results in the long term in unserviceable panels.

– Remove fingerprints, cleaning residues and other soiling carefully.

NOTE:

There is a risk of damage being caused to the acrylic glass panels and the operating unit and air ducts!

- Do not knock the acrylic glass panel against the operating unit.

Rear door

– Tighten the screw.

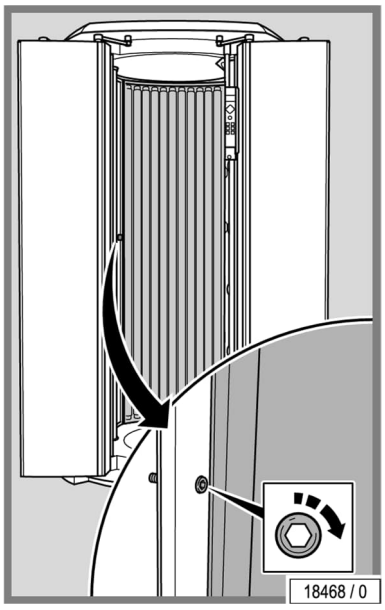

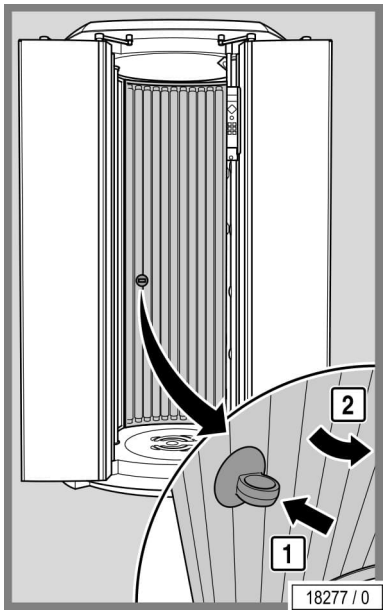

– Use suction cup to open the rear wall.

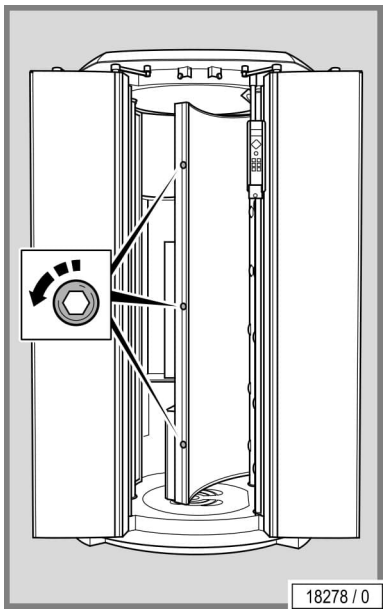

– Unscrew the screws of the strip.

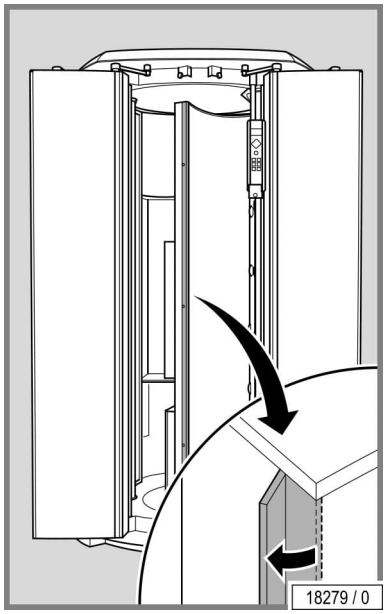

– Fold down the strip.

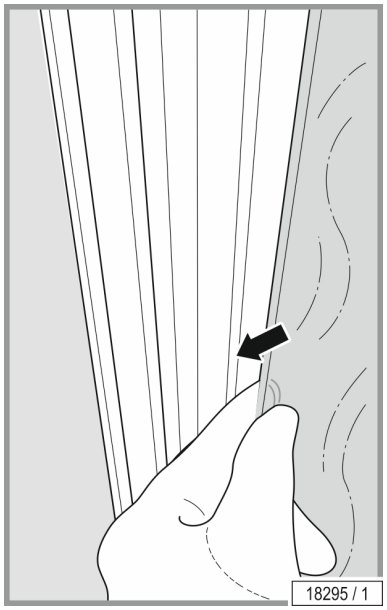

– Remove the acrylic glass panel and carefully lay it aside.

Changing the lamps: see page 62.

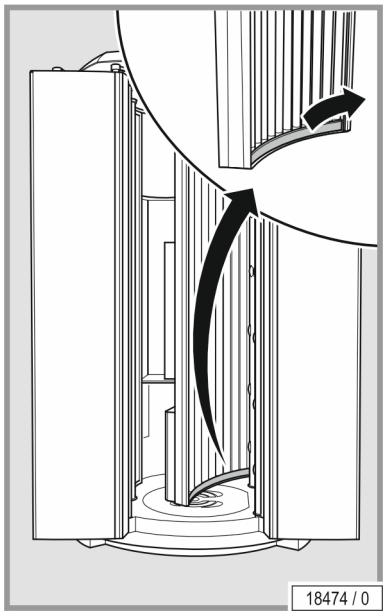

– Remove the magnetic cover.

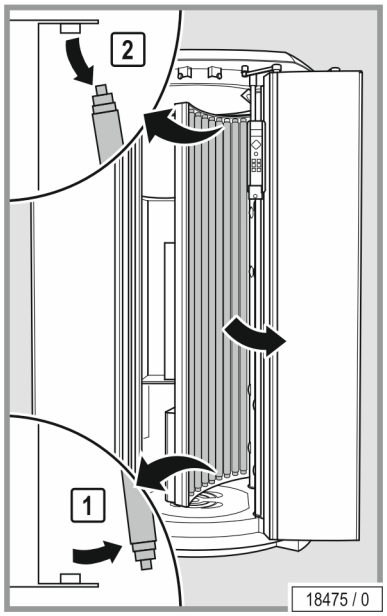

– Pull the lamps out downwards in order to remove them.

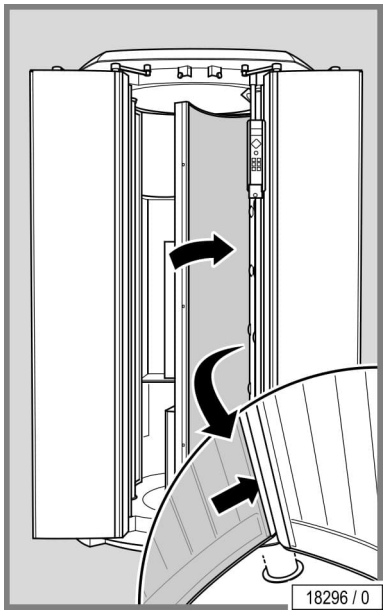

The assembly is the same process in reverse order.

During assembling, observe:

– Insert the panel carefully into the rear guide.
– Close and screw the strip tight.

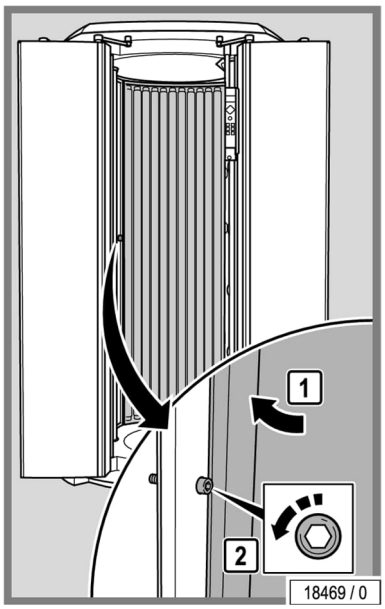

– Close the rear wall against slight resistance.
– Unscrew the screw to lock the door.

Front doors

– Unscrew the screws.

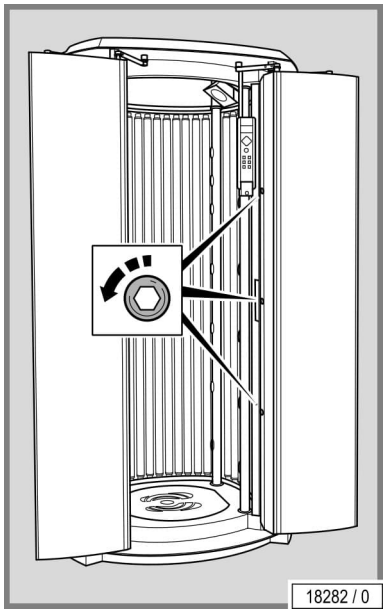

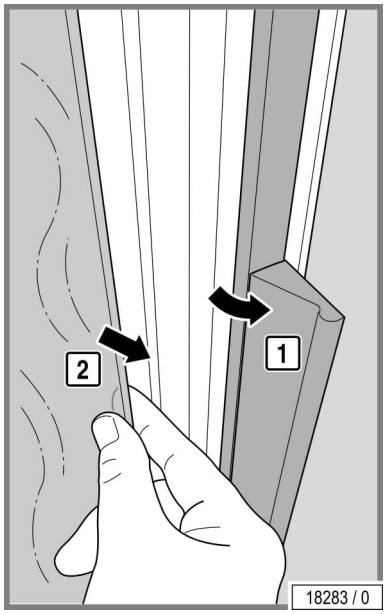

– Fold the strip away.
– Remove the acrylic glass panel and carefully lay it aside.

Changing the lamps: see page 62.

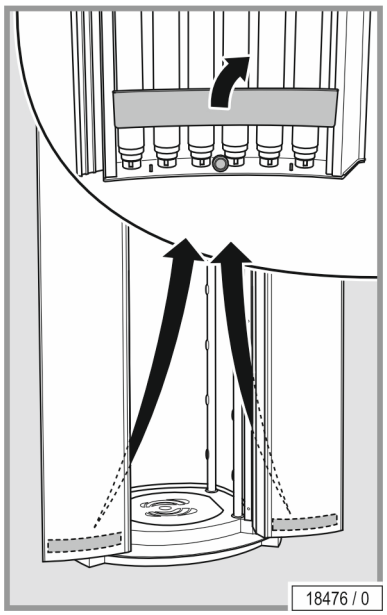

– Remove the lamp cover.

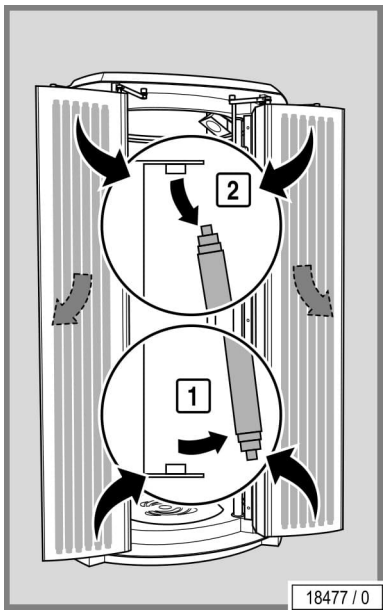

– Pull the lamps out downwards in order to remove them.

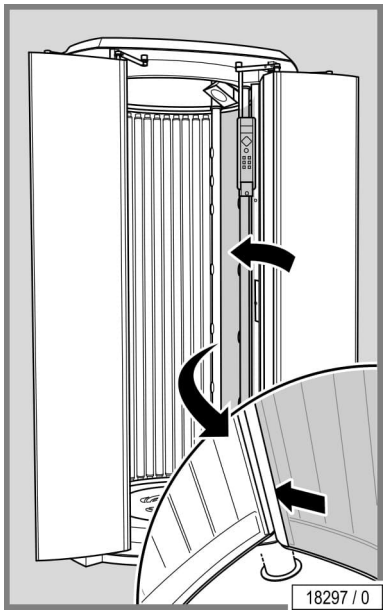

The assembly is the same process in reverse order.
During assembling, observe:

– Insert the panel carefully into the rear guide.

12.16.7 Cleaning or replacing lamps on the side walls

NOTICE

Acrylic panels unusable due to soiling!

Soiling on the panels is burned in by the hot lamps and results in the long term in unserviceable panels.

– Remove fingerprints, cleaning residues and other soiling carefully.

NOTE:

There is a risk of damage being caused to the acrylic glass panels and the operating unit and air ducts!

- Do not knock the acrylic glass panel against the operating unit.

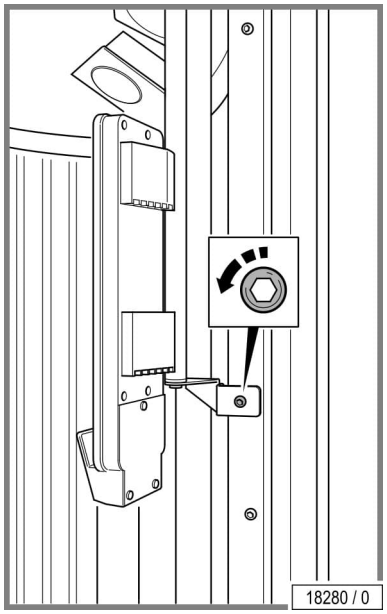

Right side wall:

– Unscrew the screw.

Where required, the operating panel can be turned away.

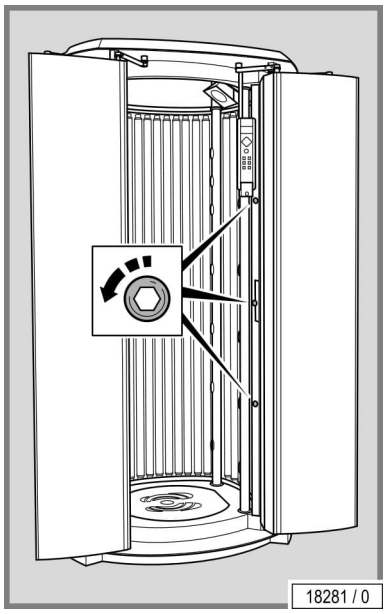

The following work steps apply for both side walls.

– Unscrew the screws of the strip.
– Fold the strip away.

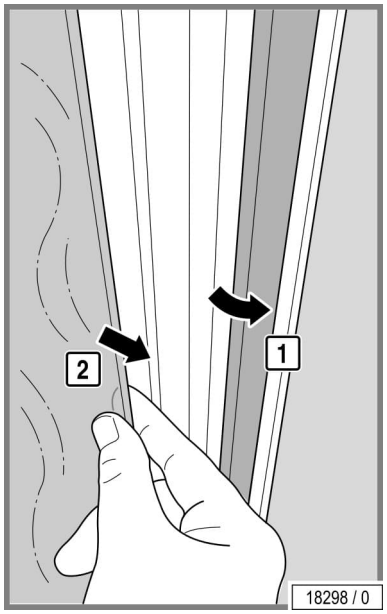

– Remove the acrylic glass panel and carefully lay it aside.

Changing the lamps: see page 62.

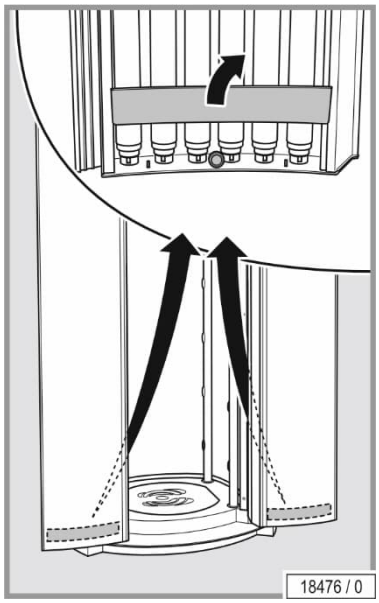

– Remove the lamp cover.

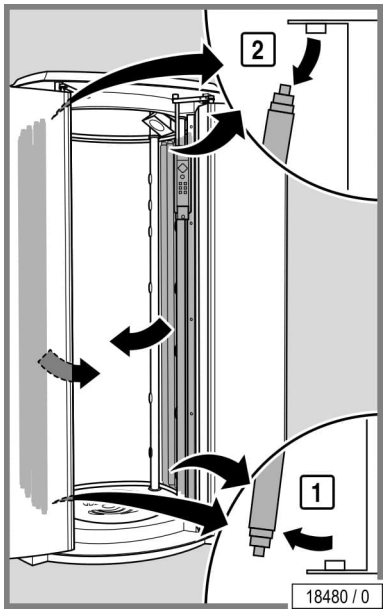

– Pull the lamps out downwards in order to remove them.

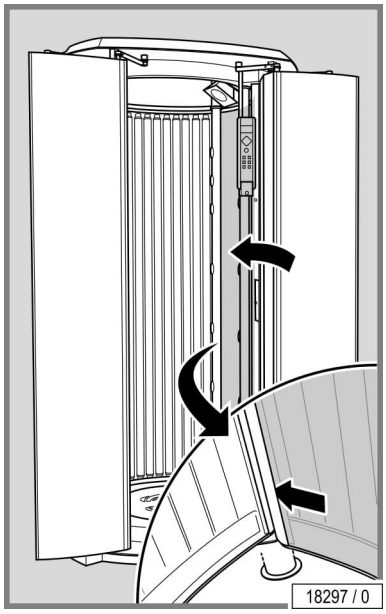

The assembly is the same process in reverse order.
During assembling, observe:

– Insert the panel carefully into the rear guide.

12.16.8 Cleaning or replacing lamps and filter panels in the canopy

Not applicable for this device.

12.16.9 Cleaning or replacing the lamps and filter panels in the shoulder tanner

Not applicable for this device.

12.16.10 Cleaning or replacing Ambient Light

Not applicable for this device.

12.16.11 Cleaning or replacing the canopy accent lighting

Not applicable for this device.

12.16.12 Cleaning or replacing the front panel accent lighting

Not applicable for this device.

12.16.13 Cleaning the filters

WARNING!

WARNING!

Sharp fan blades!

Risk of cuts from the edges when fans are exposed.

– The covers on the sides and the door may only be opened by customer service personnel.

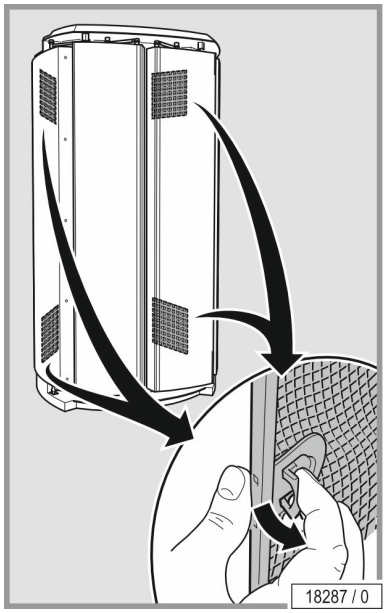

– Remove the filters.

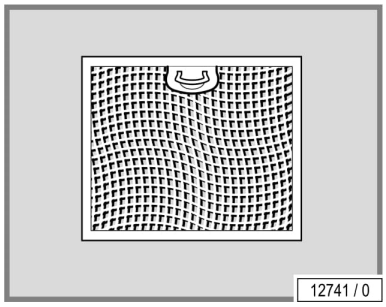

– Clean the filters wet or dry.
  Dry cleaning: Vacuum cleaner (depending on the degree of soiling)
  Wet cleaning: Use water and detergent or put in a dish-washer

NOTICE

The device may be damaged by moisture!

The cleaned filters must be dry before they are replaced.

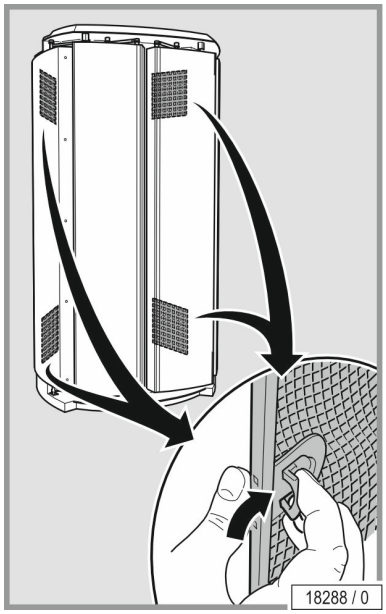

– Reinstall the cleaned and dried filters.

The assembly is the same process in reverse order.

12.16.14 Cleaning the filter mats

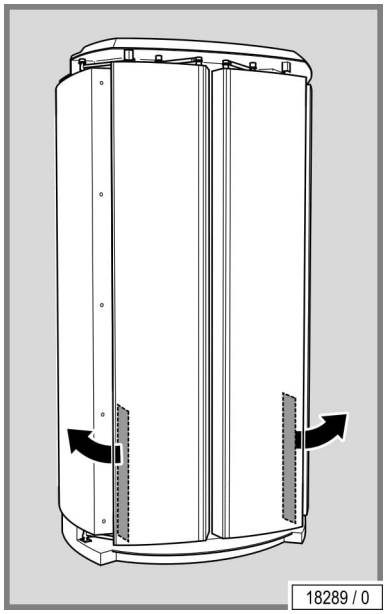

– Remove the filter mats on the rear side of the doors.

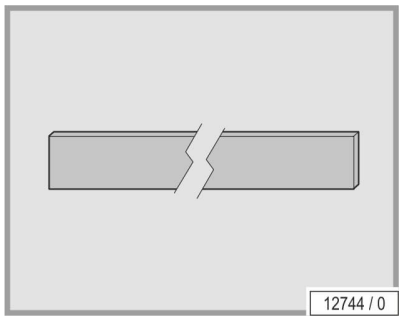

– Dry or moist clean the filter mats or replace with new ones.

  Dry cleaning: Vacuum cleaner (depending on the degree of soiling)
  Moist cleaning: Water and detergent

– Do not clean in the dish-washer!

NOTICE

The device may be damaged by moisture!
The cleaned filters must be dry before they are replaced.

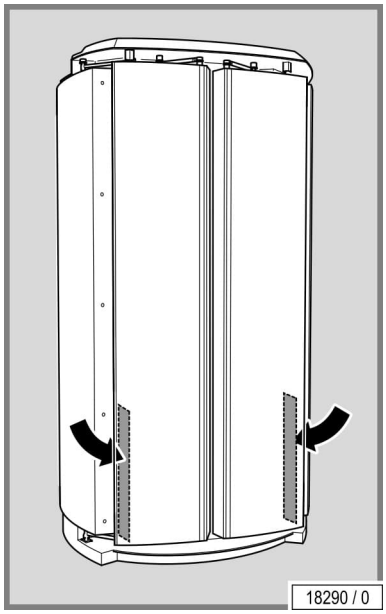

– Refit the cleaned and dried filter mats.

12.16.15 Cleaning the filter mats in shoulder tanner

Not applicable for this device.

12.16.16 Air conditioning: Empty the condensation tank and clean the filter

Not applicable for this device.

12.16.17 AQUA / AROMA SYSTEM maintenance

Not applicable for this device.

Replacing the AQUA SYSTEM canister

Not applicable for this device.

Changing the AROMA canister

Not applicable for this device.

12.17 How to store the device

12.17.1 Decommissioning

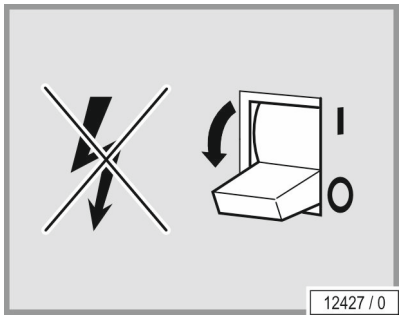

The device must be disconnected from the power supply in order to temporarily or permanently decommission it.

You must abide by the legal disposal requirements when permanently decommissioning the device.

12.17.2 Storage

Store the devices in a dry location with a stable temperature. Once the device has cooled off, pack it in plastic wrapping to protect it against scratches.

- Storage temperature: between 5 °F (-15 °C) and 140 °F (+60 °C)
- Air pressure: between 794 hPa and 1060 hPa
- Relative humidity: between 30 % and 70 %

12.17.3 Disposal

Environmental regulations – disposal of lamps and batteries

Lamps contain fluorescent materials and other waste containing mercury. Batteries contain heavy metal compounds.

Dispose of lamps and batteries according to the national waste disposal laws and in accordance with the municipal waste regulations.

Packaging

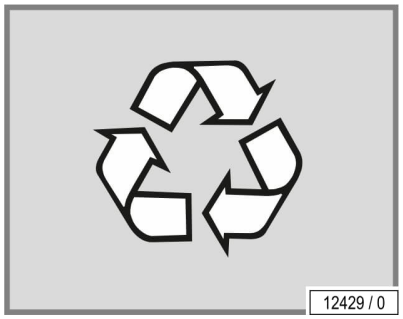

All packaging consists of 100 % recyclable materials.

Disposal of old devices

The device has been manufactured using recyclable materials.

The JK Products & Services will provide you with information on the content or potential hazards of the materials used.

Disposal of consumable supplies

Dispose of consumable supplies and their contents according to the national waste disposal laws and in accordance with the municipal waste regulations.

13 What to do when things go wrong

– Seek medical advice if in doubt!

13.1 Troubleshooting

Software and device malfunctions are indicated by error codes, e.g. #0701.

These error codes are output to the display to simplify troubleshooting:

- If a fault occurs, the error code flashes on the display.
- If several errors occur, the error messages are displayed alternately.
- Error elimination is acknowledged by pressing the START/STOP button.
- If the error cannot be cleared, contact Customer Service (see page 2) or your local service provider

More detailed information regarding the error description and solutions is available in the document 'Error codes' #1011831-.., which you find in the Technical Documentation folder.

For authorized, trained and qualified staff:

For further technical description, please contact Customer Service (see page 2).

NOTE:

As a result of EMC phenomena (high-frequency irradiation and surge) the audio system may malfunction.
This can be rectified by switching off the power supply and switching it back on again (power on reset).

WARNING!

WARNING!

Danger of skin injuries!

– The device must never be used when the timer is defective!

NOTICE

When describing the operation, the device is sometimes shown with the doors open. During the application the doors must always be closed.

Proper operation is not possible with the doors open.

14 Where you can find out more

If you have any questions, please contact Customer Service (see page 2).

15 How we studied this device

The system is built to the state of the art and the applicable safety regulations.

We reserve the right to make technical changes which are necessary to improve the system or a system component even if they deviate from pictures and information in these instructions.

16 Appendix

16.1 Model No. JK 194 / RV 32-10 VBR or JK 194 / RV 32-10: EMC information

16.1.1 Table 201: Guidelines and manufacturer's declaration – Electromagnetic emissions

The RedWave Recovery Pro has been designed for use in the electromagnetic environment specified below. The device operator must ensure that it is used in such an environment.

Emission measurements	Conformity	Electromagnetic environment – Guidelines
HF emissions as per CISPR 11	Group 1	Model No. JK 194 / RV 32-10 VBR or JK 194 / RV 32-10 uses HF power mostly for internal functions and Bluetooth®. Therefore the HF emissions are very low and it is highly unlikely that it will cause any interference to adjacent electronic equipment.
HF emissions as per CISPR 11	Class B	Model No. JK 194 / RV 32-10 VBR or JK 194 / RV 32-10 has been designed for use in all devices, including those in residential areas, and it has been determined that it can be used for residential purposes as soon as it is connected up to a public mains supply that also supplies buildings.

16.1.2 Table 202: Guidelines and manufacturer's declaration – Electromagnetic interference

The RedWave Recovery Pro has been designed for use in the electromagnetic environment specified below. The device operator must ensure that it is used in such an environment.

Interference immunity tests	Test level	Defined level	Electromagnetic environment – Guidelines
Discharging static electricity (ESD) IEC 61000-4-2	±8 kV contact discharge ±2 kV air discharge ±4 kV air discharge ±8 kV air discharge ±15 kV air discharge	±8 kV contact discharge ±2 kV air discharge ±4 kV air discharge ±8 kV air discharge ±15 kV air discharge	–
Fast transient electrical noise / bursts IEC 61000-4-4	±2 kV for mains supplies	±2 kV for mains supplies	–
Surges 61000-4-5	±1 kV series mode voltage ±2 kV common mode voltage	±1 kV series mode voltage ±2 kV common mode voltage	–
Magnetic field radiated by supply frequency (50/60 Hz) IEC 61000-4-8	30 A/m	30 A/m	–
Voltage drops, Short interruptions and supply voltage IEC 61000-4-11	<5% U_T (>95% drop in U_T) for 5 s Only this test is performed, because the device used 2 or 3 phases and has more than16A / phase.	<5% U_T (>95% drop in U_T) for 5 s	–

Note: U_T is the mains alternating voltage used for the test levels.

16.1.3 Table 204: Guidelines and manufacturer's declaration – Electromagnetic interference

The RedWave Recovery Pro has been designed for use in the electromagnetic environment specified below. The device operator must ensure that it is used in such an environment.

Interference immunity tests	IEC 60601 - Test level	Defined level	Electromagnetic environment – Guidelines
Conducted HF noise IEC 61000-4-6	3 V rms 150 kHz to 80 MHz outside the ISM band, 6 V RMS in the ISM and amateur radio bands Modulation: 80% AM at 1kHz	3 V rms 150 kHz to 80 MHz outside the ISM band, 6 V RMS in the ISM and amateur radio bands Modulation: 80% AM at 1kHz	Portable and mobile radios are not to be used at shorter distances to the Model No. JK 194 / RV 32-10 VBR or JK 194 / RV 32-10 and its cables other than the recommended safe distance, which has been calculated according to the transmitting frequency are made. Recommended safe distance: $d = 1.2\sqrt{P}$ $d = 1.2\sqrt{P}$ 80 MHz to 800 MHz $d = 2.3\sqrt{P}$ 800 MHz to 2,7 GHz P is the transmitter's maximum output power (nominal rating) in Watts (W) according to the details provided by the manufacturer of the transmitter and the recommended safe distance is given in metres (m). The field strength of the stationary radio transmitter is for all frequencies[b] in accordance with tests that were carried out on-site[a] less than the determined level. Interference is possible in the immediate surrounding of equipment that carry the following symbols.
Radiated HF noise IEC 61000-4-3	10 V/m 80 MHz to 2,7GHz Modulation: 80% AM at 1kHz 27 V/m 385 MHz Modulation: Pulse Modulation: 18 Hz 28 V/m 450 MHz Modulation: FM + 5 Hz deviation: 1 kHz sine 9 V/m 710, 745, 780 MHz Modulation: Pulse Modulation: 217 Hz 28 V/m 810, 870, 930 MHz Modulation: Pulse Modulation: 18 Hz 28 V/m 1720, 1845 MHz Modulation: Pulse Modulation: 217 Hz 28 V/m 1970, 2450 MHz Modulation: Pulse Modulation: 217 Hz 9 V/m 5240, 5500, 5785 MHz Modulation: Pulse Modulation: 217 Hz	10 V/m 80 MHz to 2,7GHz Modulation: 80% AM at 1kHz 27 V/m 385 MHz Modulation: Pulse Modulation: 18 Hz 28 V/m 450 MHz Modulation: FM + 5 Hz deviation: 1 kHz sine 9 V/m 710, 745, 780 MHz Modulation: Pulse Modulation: 217 Hz 28 V/m 810, 870, 930 MHz Modulation: Pulse Modulation: 18 Hz 28 V/m 1720, 1845 MHz Modulation: Pulse Modulation: 217 Hz 28 V/m 1970, 2450 MHz Modulation: Pulse Modulation: 217 Hz 9 V/m 5240, 5500, 5785 MHz Modulation: Pulse Modulation: 217 Hz	

Comment 1: The higher value applies to 80 MHz und 800 MHz.

Comment 2: These guidelines might not apply to all situations. The propagation of electromagnetic waves is affected by absorption and reflexes caused by buildings, objects and people.

a The field strength of a stationary transmitter e.g. standard cell phone stations (mobile / cordless phones) and public mobile radio services, amateur stations, MW and UHF radio and TV transmitters) cannot be precisely determined for theoretical reasons. It is recommended that an onsite test should be carried out in order to determine the electromagnetic environment caused by stationary HF transmitters. If the field strength of the massage device determined at the installation site exceeds the defined HF level listed above then the device must be monitored with regard to its normal operation. If any abnormal characteristics are recorded then it will be necessary to introduce additional measures, such as reorientation or converting the device.

b The field strength must be less than 3 V/m over the frequency ranges from 150 kHz to 80 MHz.

16.1.4 Table 206: Recommended safe distances between portable and mobile HF communications equipment and Model No. JK 194 / RV 32-10 VBR or JK 194 / RV 32-10

Model No. JK 194 / RV 32-10 VBR or JK 194 / RV 32-10 has been designed for use in an electromagnetic environment in which the radiated HF interference is controlled. The operator of the device can help to reduce electromagnetic interference by maintaining a safe distance between the portable and mobile HF communication devices (transmitters) and the device itself as recommended below with regard to the communication device's maximum output power.

Nominal transmitter power (W)	Safe distance with regard to the transmitting frequency (m)		
	150 kHz to 80 MHz $d = 1.2\sqrt{P}$	80 MHz to 800 MHz $d = 1.2\sqrt{P}$	800 MHz to 2.7 GHz $d = 2.3\sqrt{P}$
0,01	0,12	0,12	0,23
10	3,8	3,8	7,3
1	1,2	1,2	2,3
0,1	0,38	0,38	0,73
100	12	12	23

The recommended safe distance (d) in metres (m) can be determined by using the equation that applies to the transmitters frequency in the case of transmitters where their nominal power is not listed above, whereby 'P' is the nominal transmitter power in Watts (W) according to the details supplied by the manufacturer of the transmitter.

Comment 1: The higher value applies to 80 MHz und 800 MHz.

Comment 2: The propagation of electromagnetic waves is affected by absorption and reflexes caused by buildings, objects and people.

EM-Emission inside device

5 Hz – 2 kHz	max. 2.1 µT (1.5 kV/m)
2 kHz – 400 kHz	max. 3.3 µT (1.3 kV/m)
9 kHz – 30 MHz	max. 35 dbµV/m (56 µV/m)
30 MHz – 1 GHz	max. 95 dbµV/m (56 µV/m)
1 GHz – 6 GHz	max. 90 dbµV/m (32 µV/m)

See also page 31.

17 JK-Products, Inc. – Limited Warranty

JK-Products, Inc. warrants its products to be free from defects in materials and workmanship under intended normal use as described in the unit's Operation and Installation Instruction, for a period of one (1) year from date of sale.

This Limited Warranty applies only to the original purchaser of the equipment through JK-Products, Inc. or its authorized dealer or distributor, and is not transferable.

Global Service USA obligations under this warranty are limited to repair or replacement of any defective part without charge for that part to the original purchaser, with the following exceptions:

A Fluorescent lamps are warranted against defects for a period of thirty (30) days from date of sale.

B Only parts obtained through JK-Products, Inc., its authorized dealers or distributors may be used. Transportation costs for parts shipped to the consumer and the return of defective parts to Global Service USA are not included.

C Labor will be furnished without charge for ninety (90) days from date of purchase only. All labor and related charges must be authorized by Global Service USA prior to start of repairs, and must coincide with Global Service USA established rates and time allotment policy.

D Acrylic: Refer to Manufacturer's Acrylic Warranty Policy. It is imperative that the original customer completes and returns the enclosed warranty card within 10 days after purchase to insure valid registration and coverage for potential claims.

E Items considered to be wear items such as rubber foot mats, buttons, or other items which the user comes into contact with during normal operation of the device, are warranted for a period of 30 days from the date of purchase.

If the warranty card is not registered, proof of purchase from JK-Products, Inc. or its authorized dealer or distributor will be required prior to any consideration on warranty claims. This could result in service delays.

This warranty is extended to the individual or legal entity, whose name appears on the warranty registration card filed with Global Service USA, or whose name appears on the original sale document and may not be transferred to any other individual or legal entity.

This warranty does not apply to any failure of the product, or any parts of the product due to alterations, modifications, misuse, abuse, accident, improper maintenance, improper installation, acts of God or if the serial number on the product has been removed, altered or defaced. Adequate packaging must be used for returned goods to prevent freight damage.

There are no warranties which extend beyond the description on the face hereof. There is no express or implied warranty of fitness of merchantability.

The remedies provided in this limited warranty are the exclusive remedies provided to the purchaser by Global Service USA and are provided in substitution of all other remedies. Consequential and incidental damages are excluded.

No person, firm or corporation is authorized to obligate JK-Products, Inc. for any liability in connection with the sale or use of these goods.

17.1 Limited Acrylic Warranty

JK Products, Inc. warrants its acrylic sheets to be free from defects in material and workmanship, under intended normal use, for a period of one (1) year from date of sale of the appliance or 1,200 hours of operation whichever comes first. Due to the lotions, cosmetics, disinfectant and improper cleaners used on acrylic surfaces that cannot be controlled by JK Products, Inc., after the first thirty (30) days of warranty period acrylic will be subject to a prorated cost to the consumer.

JK Products, Inc. obligations do not include transportation charges on replacement acrylic.

JK Products, Inc. assumes no liability for the cost of removing defective sheets or installing replacement sheets, or for damage to persons or property.

To make a claim, contact an authorized dealer or distributor of JK-Products, Inc. or Global Service USA with the model number, the serial number, and the date of purchase of the bed in which the acrylic will be used.

There are no warranties which extend beyond the description on the face hereof. There is no express or implied warranty of fitness or merchantability.

The remedies provided in this limited warranty are the exclusive remedies provided to the purchaser by Global Service USA and are provided in substitution of all other remedies. Consequential and incidental damages are excluded.

JK Products & Services, Inc.
1823 Grant Avenue
Suite A
Jonesboro, Arkansas 72401

Phone: 800-445-0624
E-mail: support@jkamerica.com
http://jkproducts.us/service

17.2 Warranty Claims

17.2.1 Policy & Procedures

1. When to file a Warranty Claim:

In the event that your beauty system is not functioning properly under intended normal use as described in the unit's Operation and Instruction Manual, you may then have established cause to file a Warranty Claim.

NOTE:

Both the beauty system and legal registered owner must meet the criteria established under JK Products, Inc. Limited Warranty as described in this manual before any Warranty Claim will be considered.

2. Where to call to place a Warranty Claim:

JK-Products, Inc. is supported nationwide by an extensive dealer/distributor network through whom the majority of our units are sold. These dealers/distributors are required by contract to stock sufficient parts to meet the various warranty and nonwarranty needs of their customers.

Therefore, in order for you to properly file a Warranty Claim, you must locate the name and phone number of the dealer/distributor through whom you purchased your unit. Normally this information can be easily located either on your paid invoice or other proof of purchase documentation that you received when taking delivery of the unit.

Next, notify the dealer/distributor of the serial number, model number and date unit was purchased. This will initiate the Warranty Claim process.

Upon determination of the problem, your dealer/distributor can then supply you with the part(s) and proper instructions to return your unit to working order.

Each dealer/distributor has their own internal procedure for handling Warranty Claims and credits.

NOTE:

JK-Products, Inc., the manufacturer, does not involve itself in the direct handling of a Warranty Claim except where mitigating circumstances apply and where required by law.

NOTE:

If a part returned to Global Service USA proves to be operational and not defective, or if product code numbers on part do not correspond with individual unit date on file with Global Service USA, then a 30% restocking fee will be charged in addition to the retail purchase price of part.

Acknowledgment of the Agreement is not required for acceptance of the foregoing stipulations.

You must comply to the instructions and warnings under chapter:

- 4.1 Intended use
- 5.1 Prohibited usage
- 6 What you must do to avoid serious harm

Any other use shall be considered improper. The manufacturer cannot be held liable for damage or injuries resulting from misuse. The operator bears the sole risk for this.

The proper use also includes compliance with the manufacturer`s instructions, operating and maintenance conditions. This device may only be operated, maintained and repaired by persons familiar with these tasks and who are aware of the dangers involved.

17.2.2 Labor Warranty Claim/ Credit Procedures

Global Service USA furnishes labor without charge for a period of 90 days from date of purchase. All labor and related charges must be authorized by Global Service USA prior to start of repairs, and must coincide with Global Service USA established rates and time allotment policy.

Please contact our Service Department for authorization and billing procedures.

17.2.3 Quality inspection and acceptance form

The form can be found in the separate document ‘Quality inspection and acceptance form’ (#1014113-..) which is provided in the Technical Documentation folder.

Tear here to remove page

Quality Inspection and Acceptance Form.

Both parties must sign the form in order for it to be valid.
Upon completion, email the signed form to JK Products & Services at
Questions? (800) 643-0086 QIF@JKAMERICA.COM

Club/Salon Name: _____ Contact: _____
Street Address: _____
City: _____ State: _____ Zip: _____
Phone Number: _____ Install Date: _____
Service Provider: _____

Select the box next to the appropriate subsystem indicating the system is installed and functioning properly. If the device is not equipped with a particular subsystem draw a line through it.

Lamps: ☐ Body Bench ☐ Body Canopy ☐ Facial (HP) ☐ Facial (Spaghetti) ☐ Shoulder Tanner ☐ Decor

Options: ☐ Skin Sensor ☐ Air Conditioning ☐ Aqua Fresh ☐ Aroma ☐ Audio System

Select the box next to the appropriate subsystem indicating the system has been setup and adjusted. If the device is not equipped with the subsystem draw a line through it.

☐ Lifting Mechanism ☐ Timer Network

Select the box next to the operating feature and maintenance functions that have been explained to the customer or salon representative.

☐ Basic Operation ☐ Accessing lamps ☐ Air Filter Location ☐ Feature Operation
☐ The Operating Instructions, Service Tool, and Eye Protection have been provided
☐ The device has been installed, electrically connected and fully operational.
☐ The device has been installed, but not electrically connected all systems appear to be operational.

Signing this form confirms the device was installed and tested both electrically and functionally by the Service Provider, any damage is indicated in the section to the right, and the selections above have been completed, explained, and understood by all.

Service Provider Representative

Print Name _____ Signature _____ Date _____

Salon/Club Representative

Print Name _____ Signature _____ Date _____

Make/Model: _____
Serial Number: _____
Please indicate here if device rebranded and labels applied. ☐

Please indicate (by marking an X) on the applicable illustration any damage or improper fitting decor parts.

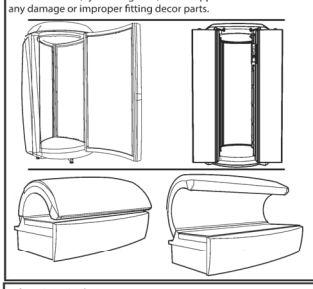

Affix Name Plate from Manual: HERE:

Acceptance testing:

Equipment used:	Serial Number:	Calibration Due:
High Voltage (Hypot)		
Ground Bond		
Ammeter		
Voltmeter		

High Voltage (Hypot) test: 1.25 kV AC / 2.5 kV DC ☐ Pass ☐ Fail
Ground Bond: Less than 0.1 Ohms ☐ Pass ☐ Fail
Amperage: Line 1 _____ Amperage: Line 2 _____ Amperage: Line 3 _____
Voltage: L1 to L2 _____ Voltage: L1 to L3 _____ Voltage: L2 to L3 _____

Comments: _____

03/2019 1014113-02- Quality Inspection and Acceptance Report

19320 / 0

17.3 Limited Lifetime Warranty

Global Service USA warrants specific individual components of the beauty system against defects in materials and workmanship for the life of the product. Coverage is limited to units purchased after November 1, 1994.

This warranty is restricted to the following components only:

- Steel Back Panels
- Structural Steel Frame Components
- Exterior Steel Body.

NOTE:
Components are warranted on an individual basis and not as they may affect the complete product.

Warranty coverage does not include cosmetic abnormalities such as scratches, nicks, dents, rust, oxidation of paint or other cosmetic changes that do not interfere with the designed function of the unit.

This warranty does not include failure of the product due to alteration, modifications, misuse, abuse, improper maintenance, improper installation or repair.

This warranty is not transferable and is only applicable to the original purchaser named on a completed and registered warranty record at JK-Products, Inc. headquarters.

JK Products, Inc. obligations do not include transportation charged on the shipping of new components to the customer or on the return of defective components of the manufacturer. All freight charges must be paid by the customer.

There are no warranties which extend beyond the description on the face hereof. There is no express or implied warranty of fitness or merchantability.

The remedies provided in this limited warranty are the exclusive remedies provided to the purchaser by Global Service USA and are provided in substitution of all other remedies. Consequential and incidental damages are excluded.

NOTE:
Any misuse, abuse, modification, alteration, improper maintenance, improper installation, etc. of this product or its intended use will subject said party to direct responsibility and liabilities for any and all consequences resulting from such action. Furthermore, such actions will void all warranties and may relieve Global Service USA of any liabilities relating to said product.

18 Index

A

Air routing 16
Application 46
Application times 40
Application tips 52

B

Base plate
  Load 24
Bluetooth® 47

C

Cleaning 53, 56
  Filter 74
  Filter mats 75
Cleaning or replacing lamps
  Side walls 70
Cleaning/disinfection
  Cleaning intervals 58
Commissioning 19
Control Center 41
Cosmetics 52
Customer Service 3

D

Decommissioning 77
Definitions 8
Device description 14
Dimensions 25
Disinfection 53, 56
Disposal 77

E

Electrical specifications 24
EMC information 82
Export 13

F

Filter mats, cleaning 75
Filter, cleaning 74
Foreseeable misuse 33
Functions 42

G

Guidelines 13

I

Information about Vibra Shape 33
Installation location 16
Intended use 28

L

Lamp configuration 26
Lamps
    Control 26
    Power rating 26
Lamps in the door, cleaning or replacing
    Doors 65
Lamps, Replacing 62
Low-pressure lamps 63

M

Maintenance intervals 59
Maintenance overview 59

N

Noise level 24

O

Obligations of the studio operator 33
Operating altitude 17
Order numbers 26, 27

P

Packaging 77
Plastic surfaces (care) 57
Power rating 24
Prohibited usage 29
Protective goggles 52

R

Recycling 77
Risk of injury 29

S

Safety measures during maintenance work 54
Scope of delivery..... 13
Setup location 17
Spare parts 59
    Order numbers..... 27
Staff training 34
Starter..... 26
Storage 77

T

Technical data..... 24
Transport..... 16
Troubleshooting..... 79

V

Ventilation 16
Vibration plate..... 29